# 15" Wide Designer Lockers – 20000 Series
## Installation Instructions

Thank you for selecting Salsbury 20000 Series 15" Wide Designer Lockers. We are confident that the quality and construction of the lockers will prove to be a good investment. These instructions are intended to assist you in a typical wall-anchored or back-to-back locker installation. Individual job conditions will dictate the type of fasteners and whether the lockers must be anchored to the wall, the floor, or both.

The Salsbury 20000 Series 15" Wide Designer Lockers require minimal assembly. The basic lockers are factory assembled. It may be necessary to install the bases onto the floor, the lockers onto the bases and to each other, the optional side panels to the exposed sides of the lockers, and the lockers to a wall. See reverse side for illustration of three lockers being installed.

### Hardware Supplied with Each Locker

1. (1) Metal wall strap with three holes to attach locker to wall or back-to-back. Bend the strap to tie locker to wall as shown in illustration.

2. (4) #8 x 5/8" long pan head sheet metal screws to attach strap to top of lockers back-to-back or between locker and wall.

3. (2) 10-24 x 1-1/4" long pan head machine screws to fasten lockers together side-by-side. Mating t-nuts are pre-installed in locker walls. See reverse side for illustration of three lockers being installed.

4. (2) 1-1/4" long wood screws to attach side panel to locker.

5. (1) Number plate.

### Installation Instructions

1. Wooden slats are attached to the bottom of the base with finishing nails to support the unit during shipping - remove them by tapping them away from the base with a mallet, then remove any remaining finishing nails.

Bases should be set in place and leveled. The rear edge of the base should touch the wall or the other base if lockers are installed back-to-back. There are 1-wide and 3-wide bases.

2. If the back of the locker is against a wall, bend the metal strap as shown in the illustration. Set the locker on the base spaced 5/8" from the wall for ventilation air. The metal straps will be installed in Step 5 below.

Leave the metal strap flat for fastening lockers back-to-back. Allow a 1-1/4" ventilation space between the backs of lockers if lockers are back-to-back and side panels are being installed. The metal straps will be installed in Step 5 below.

Lockers alongside a wall with padlock type locking must be spaced 5/8" from the side wall to allow swing room for the padlock.

3. Bolt multiple lockers together through the two unused holes and tee nuts near the door hinges.

4. Attach the finished side panels flush with the front of the locker body (not the door) allowing the excess to cover the 5/8" rear air space.

5. Once the lockers are plumb and level, attach the bent or flat metal straps to the top of the lockers and to the wall or other lockers as required.

6. Peel backing from number plate, align, and press into recess.

### Illustration – 1 Locker

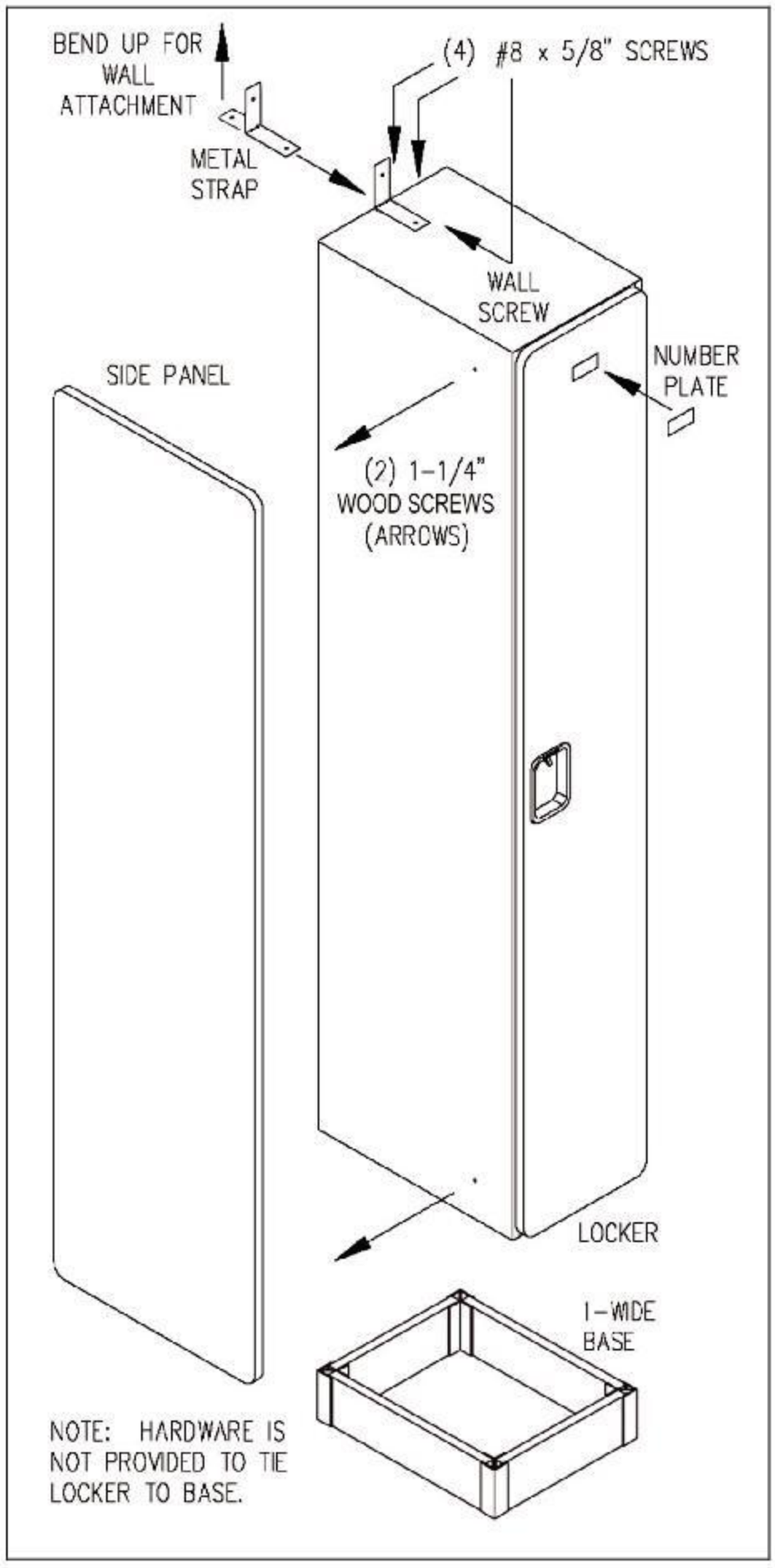

# 15" Wide Designer Lockers - 20000 Series

## Installation Instructions

**Illustration – 3 Lockers**

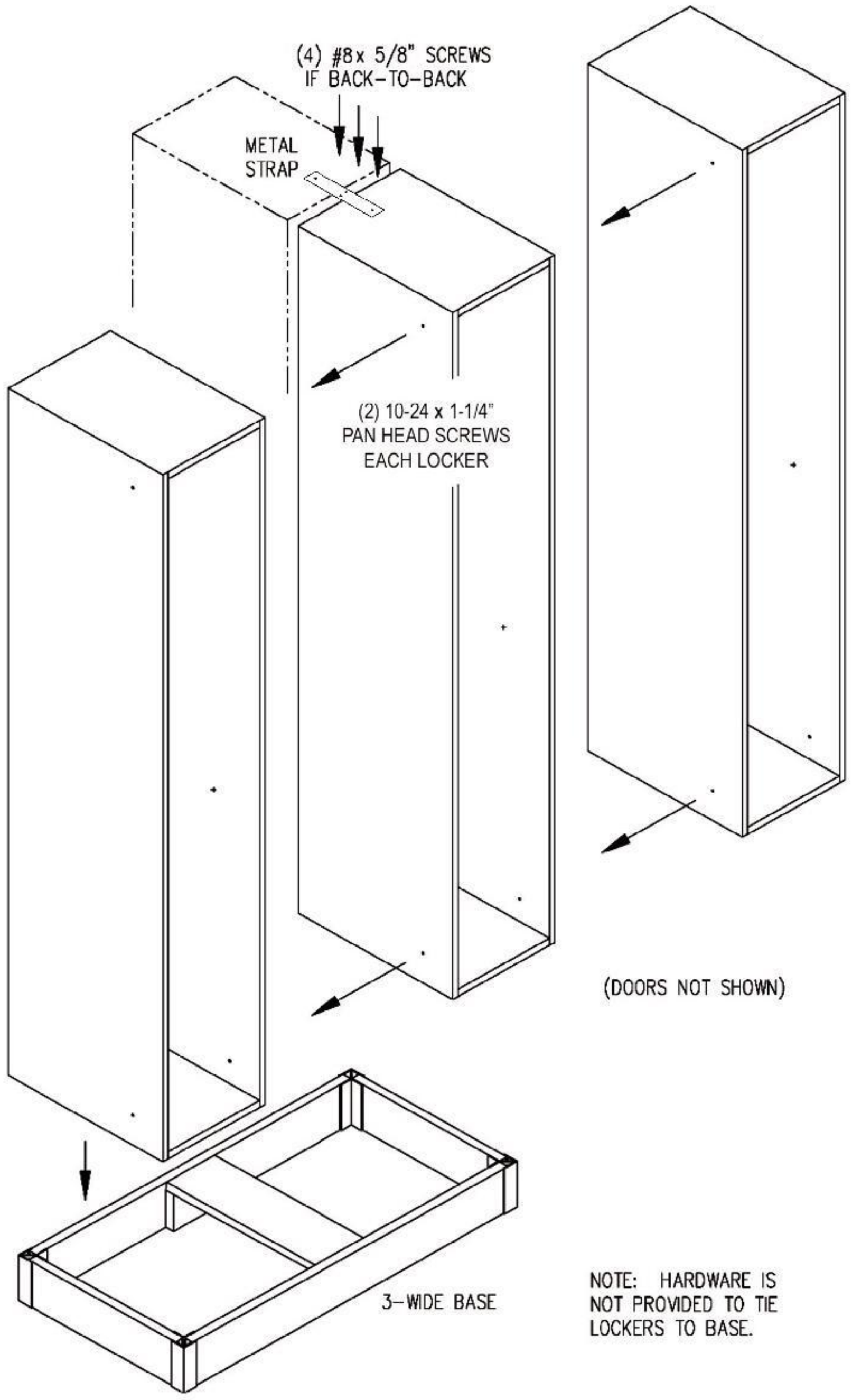


NOTE: HARDWARE IS NOT PROVIDED TO TIE LOCKERS TO BASE.

# 15" Wide Designer Locker Options - 20000 Series
# Installation Instructions

These instructions are intended to assist you in positioning and fastening the sloping hood and angled side panel to the locker.

## Sloping Hood Installation Instructions

### 1 - Wide Sloping Hood

Place the sloping hood on top of locker with the front edge flush with the locker body, not the door, and the sides flush with sides of the locker. Install two (2) 1-1/4" long self-tapping dry wall screws (provided) through the ceiling of the locker compartment (from the inside) into the bottom of the sloping hood. Pre-drill two (2) pilot holes (6) inches from the front face of the locker with a 1/16" drill bit as indicated.

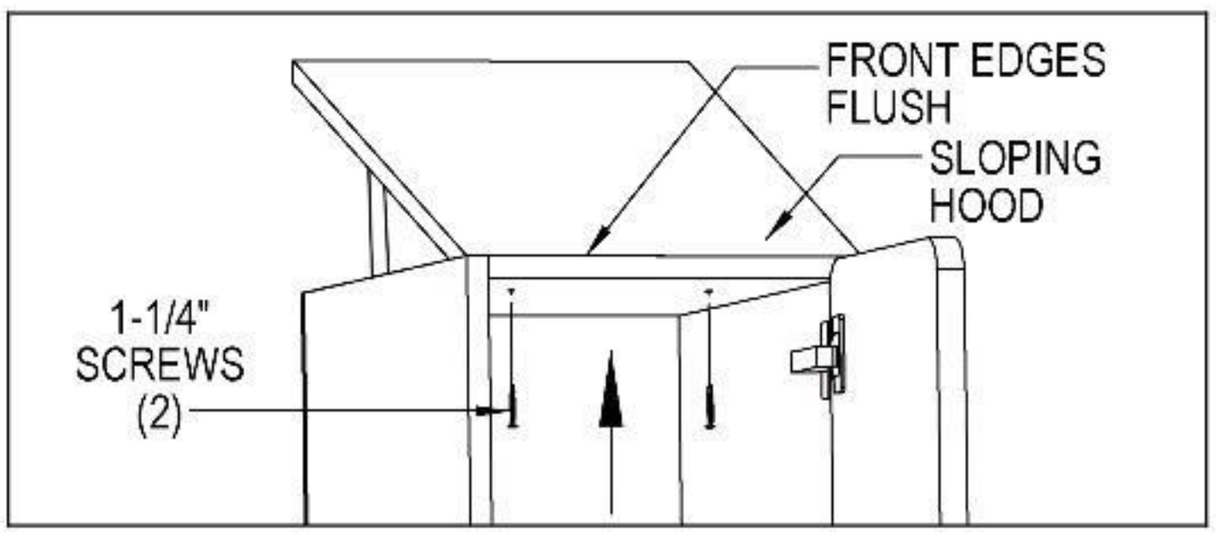


### 3 - Wide Sloping Hood

Place the sloping hood on top of locker with the front edge flush with the locker body, not the door, and the sides flush with sides of the locker. Install six (6) 1-1/4" long self-tapping dry wall screws (provided) through the ceiling of the locker compartment (from the inside – two (2) per compartment) into the bottom of the sloping hood. Pre-drill two (2) pilot holes per compartment six (6) inches from the front face of the locker with a 1/16" drill bit as indicated.

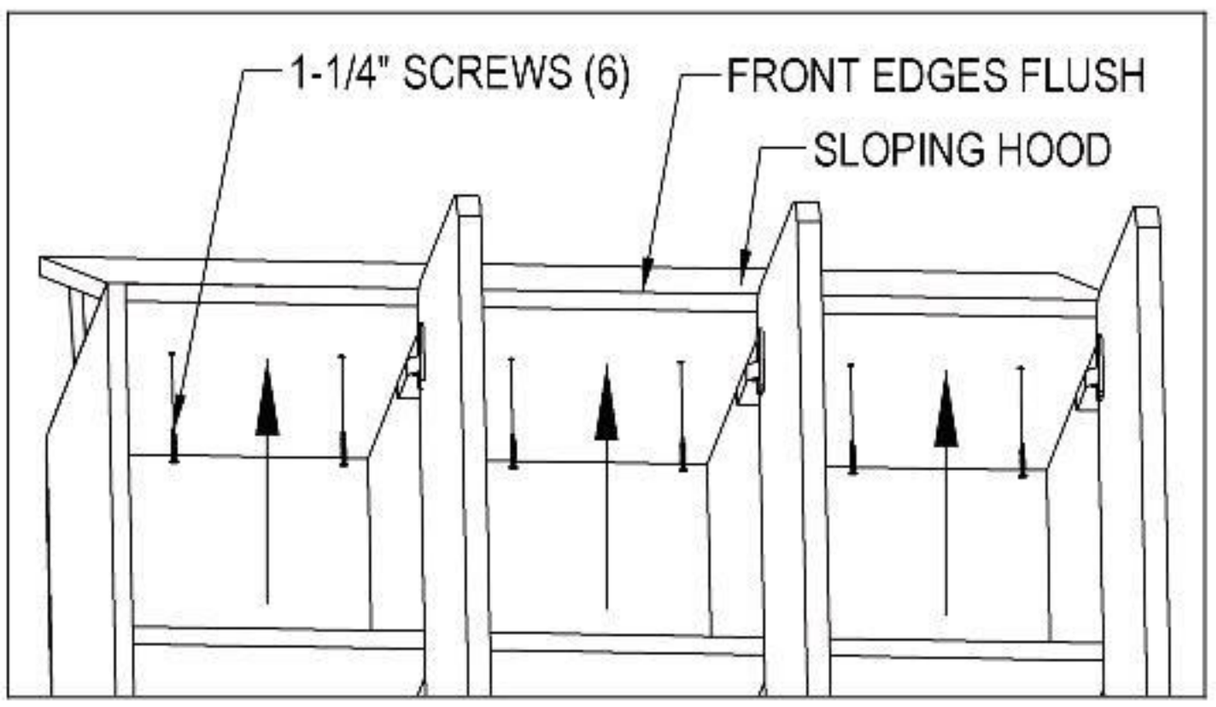


## Angled Side Panel Installation Instructions

Attach the side panel flush with the front of the locker body, not the door. Install two (2) 1-1/4" long self-tapping dry wall screws (provided) in pre-drilled holes from inside the locker.

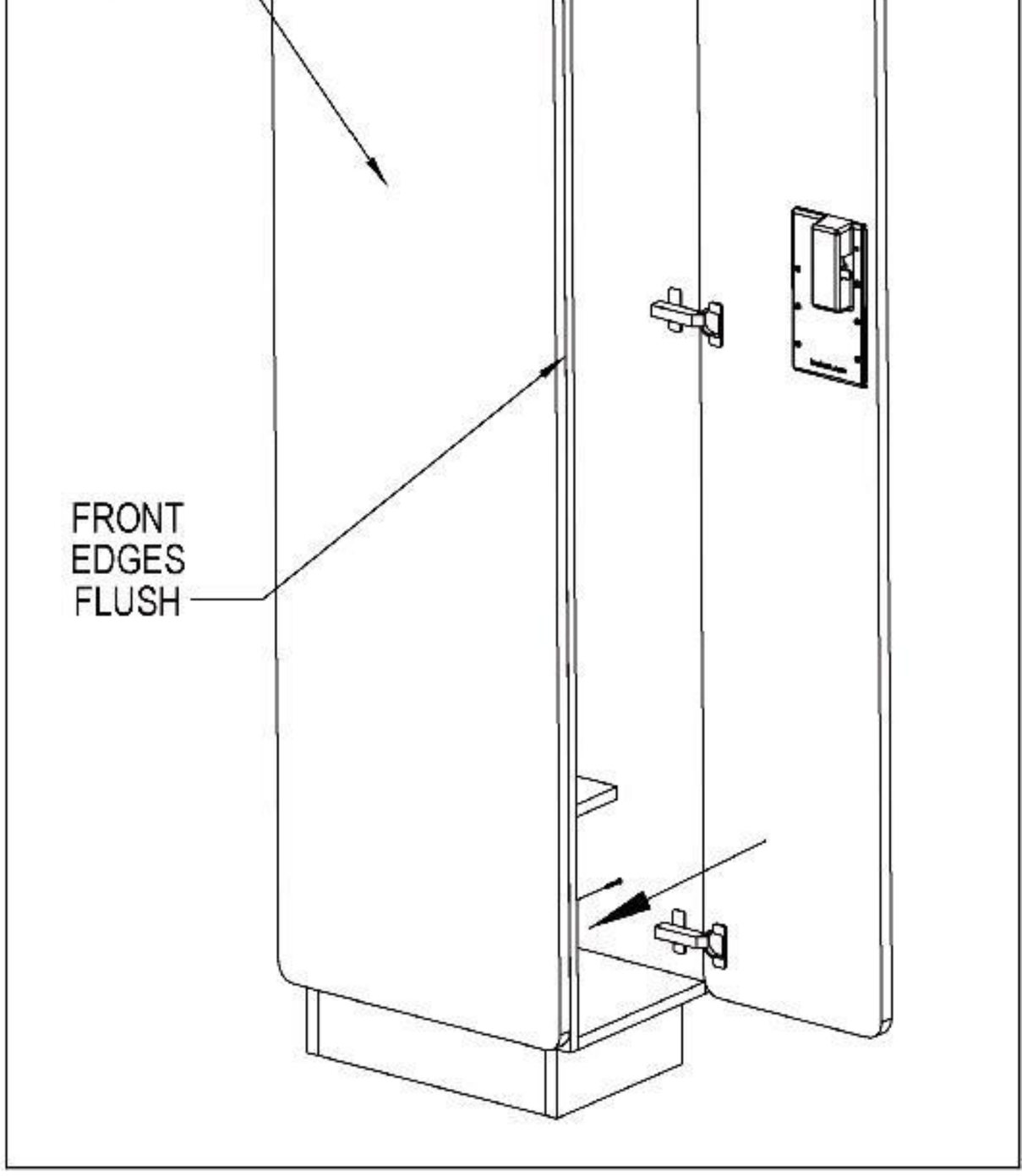

# 15" Wide Designer Locker Options - 20000 Series
## Installation Instructions

Locker fillers may be cut to special sizes for custom installations.

### Vertical In-Line Filler and Flat Top In-Line Filler

Install the vertical in-line filler by fastening it to the lockers by installing screws from inside the lockers into the vertical filler. Install optional 48" long cleats for greater stability by installing screws from inside the lockers into the cleats. Install two 12" long cleats 3/4" from the top edge of the lockers by installing screws from inside the lockers into the cleats then install one additional cleat at the same elevation onto the vertical in-line filler. Fasten the flat top in-line filler to the cleats with liquid nails (or similar product). #8 x 1-1/4" screws are provided for installation of the vertical filler and cleats.

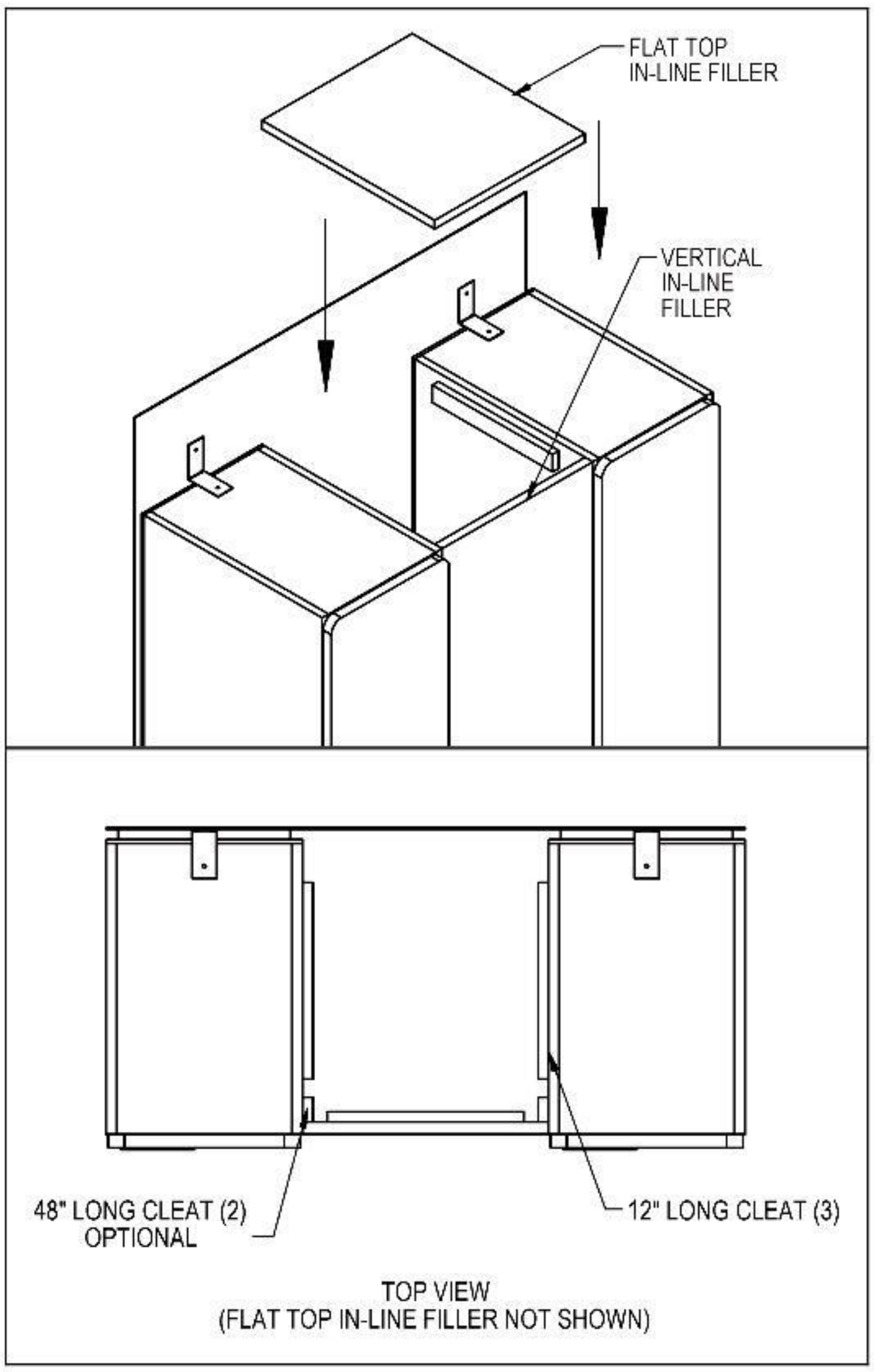


### Vertical In-Line Filler and Sloping Hood In-Line Filler

Install the vertical in-line filler by fastening it to the lockers by installing screws from inside the lockers into the vertical filler. Install optional 48" long cleats for greater stability by installing screws from inside the lockers into the cleats. Install two 12" long cleats 3/4" from the top edge of the sloping hoods by installing screws into the cleats and through the sloping hoods then install one additional cleat onto the vertical in-line filler 3/4" from its top edge. Fasten the sloping hood in-line filler to the cleats with liquid nails (or similar product). #8 x 1-1/4" screws are provided for installation of the vertical filler and cleats.

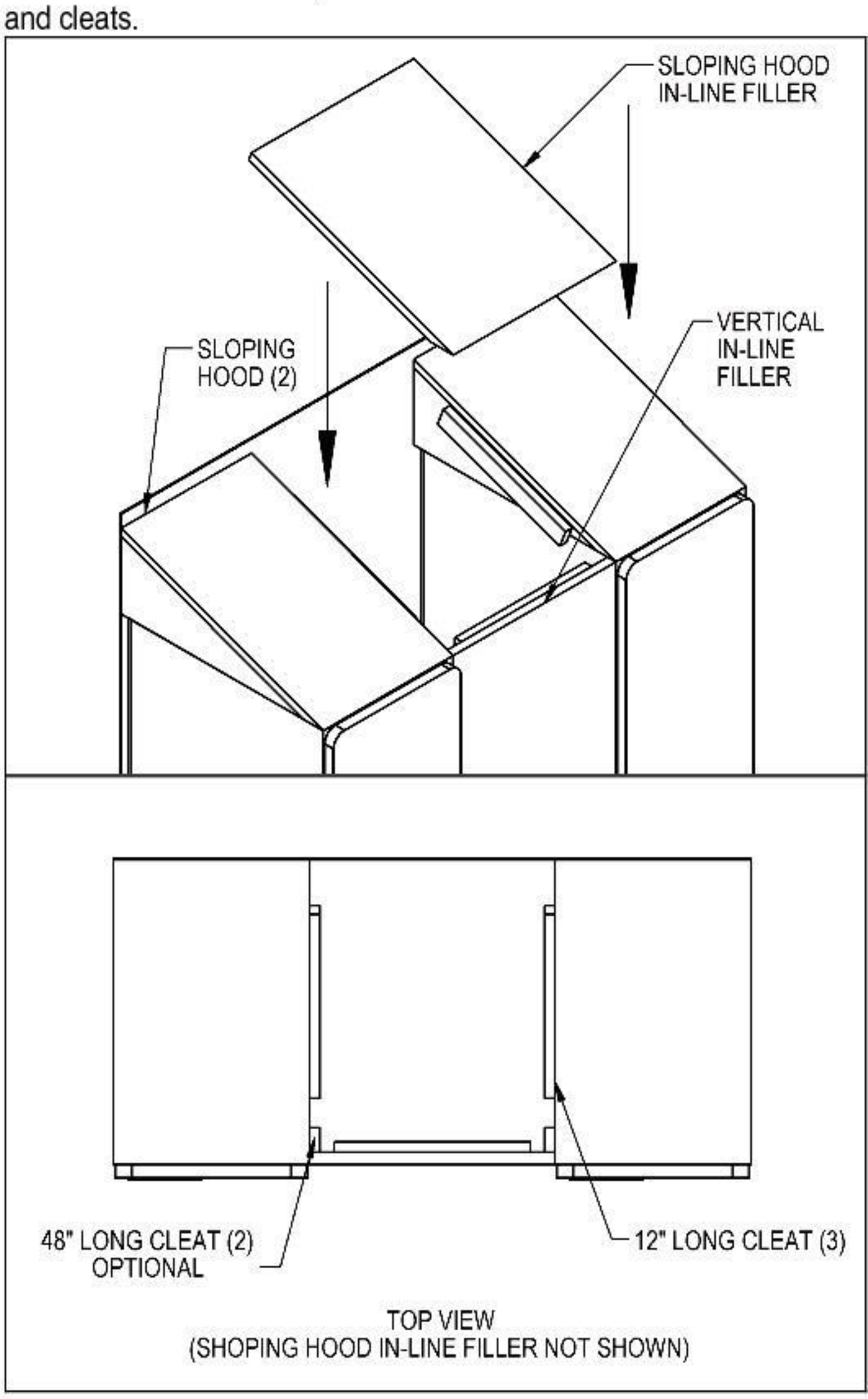

# 15" Wide Designer Locker Options - 20000 Series
## Installation Instructions

### Vertical Corner Filler and Flat Top Corner Filler

Vertical corner fillers are comprised of a 3" and a 2" wide piece, each 72" long. Install the vertical corner filler pieces by vertically overlapping the 3" wide piece beyond the 2" wide piece as shown in the illustration. Fasten the pieces to the lockers by installing screws from inside the lockers into the vertical corner fillers. Install optional 48" long cleats for greater stability by installing screws from inside the lockers into the cleats. Install two 12" long cleats 1/4" from the top edge of the lockers by installing screws from inside the lockers into the cleats then install two additional cleats at the same elevation onto the wall. Fasten the flat top corner filler to the cleats with liquid nails (or similar product). Notch the flat top corner filler to fit behind the vertical filler. #8 x 1-1/4" screws are provided for installation of the vertical filler and cleats.

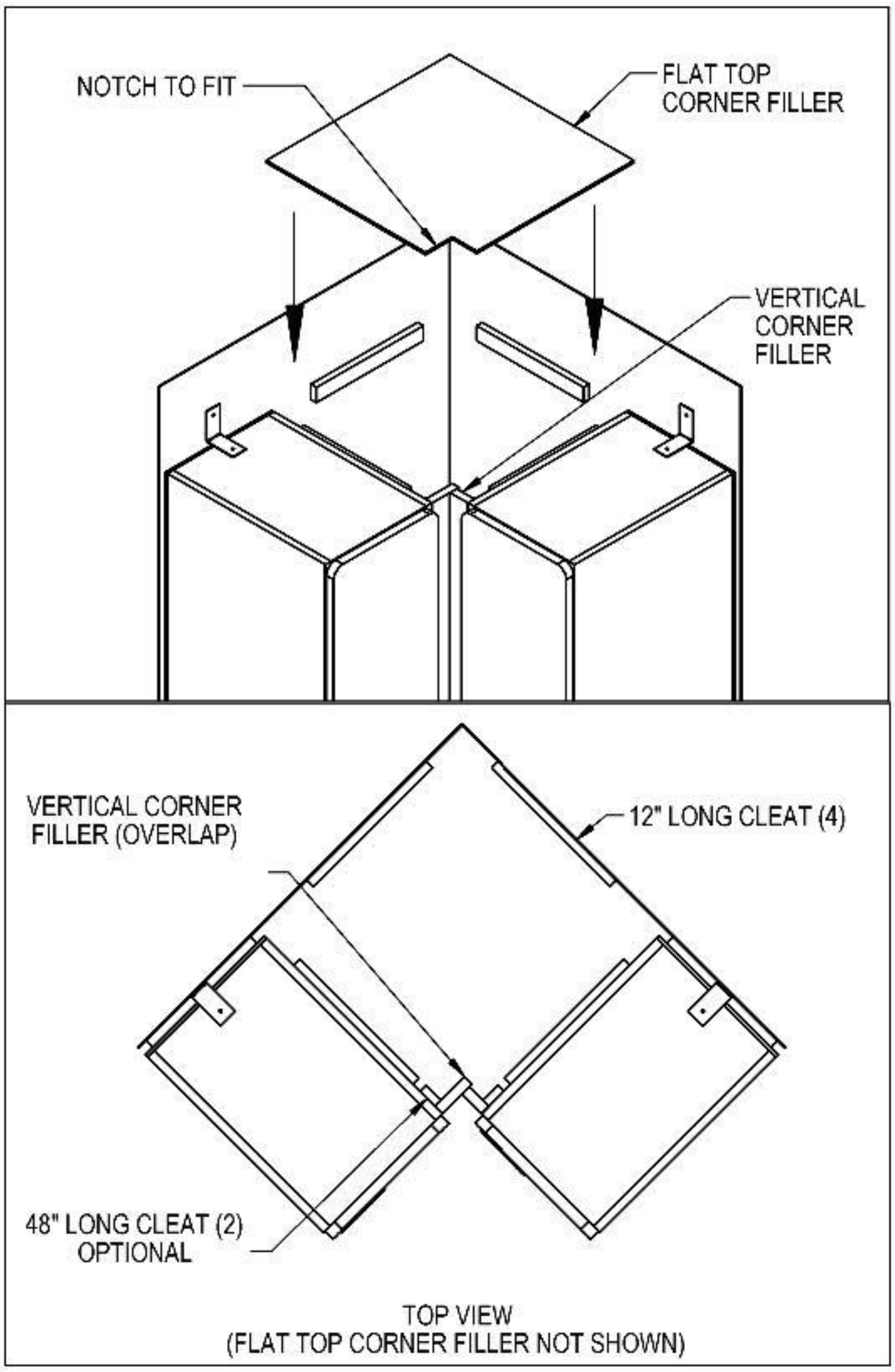


TOP VIEW
(FLAT TOP CORNER FILLER NOT SHOWN)

### Vertical Corner Filler and Sloping Hood Corner Filler

Vertical corner fillers are comprised of a 3" and a 2" wide piece, each 72" long. Install the vertical corner filler pieces by vertically overlapping the 3" wide piece beyond the 2" wide piece as shown in the illustration. Fasten the pieces to the lockers by installing screws from inside the lockers into the vertical corner fillers. Install optional 48" long cleats for greater stability by installing screws from inside the lockers into the cleats. Install two 12" long cleats 3/4" from the top edge of the sloping hoods by installing screws into the cleats and through the sloping hoods then install two additional cleats onto the wall to support the sloping hood corner filler. Fasten the sloping hood corner filler to the cleats with liquid nails (or similar product). #8 x 1-1/4" screws are provided for installation of the vertical filler and cleats.

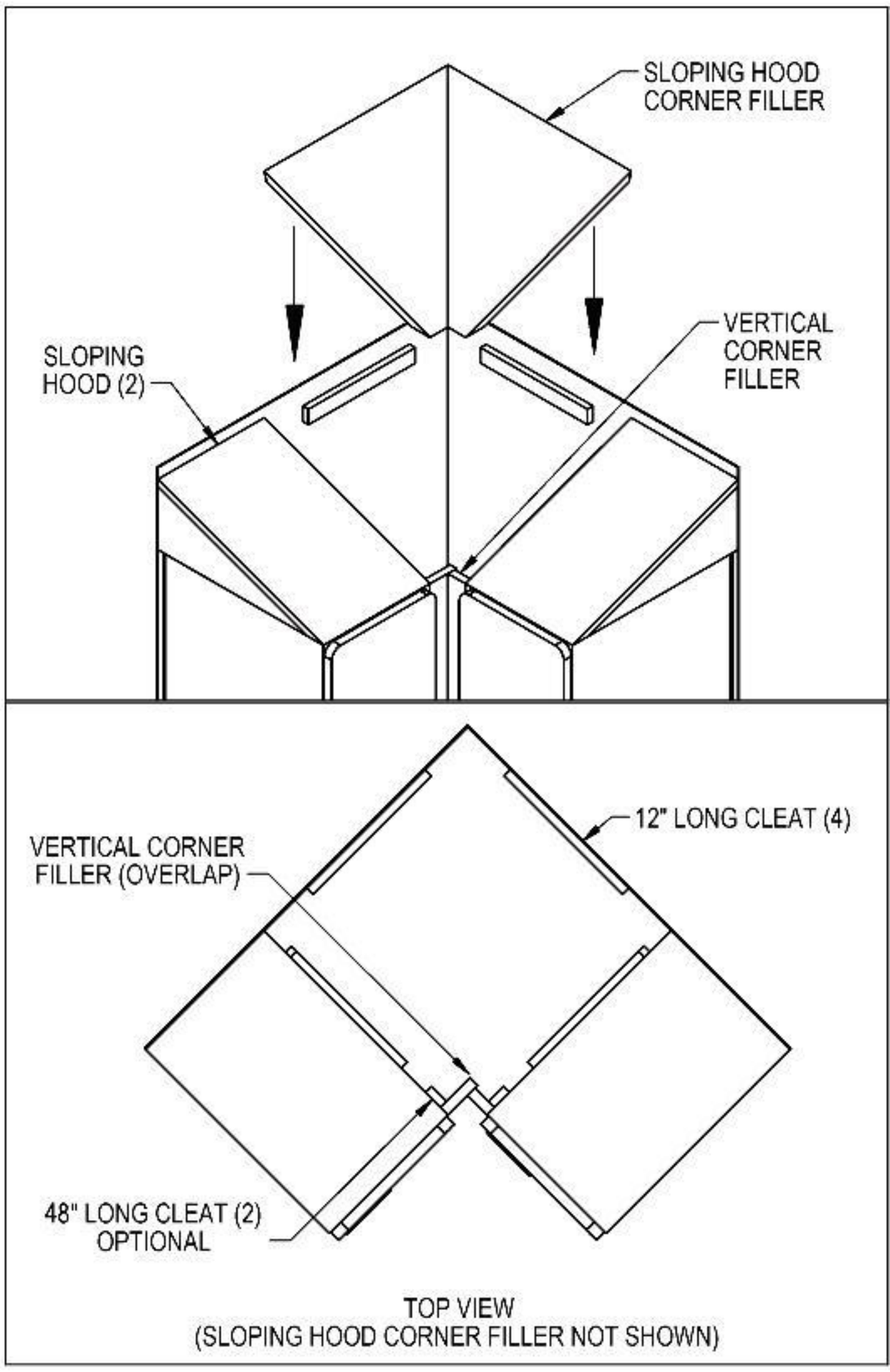


TOP VIEW
(SLOPING HOOD CORNER FILLER NOT SHOWN)

# 15" Wide Designer Locker Options - 20000 Series
## Installation Instructions

### Front Filler Fascia

Assemble the front filler fascia by placing color laminated piece in front of base piece, then connect the two pieces together using screws by drilling at approximately a 75 degree downward angle. #8 x 1-1/4" long screws are provided for the installation.

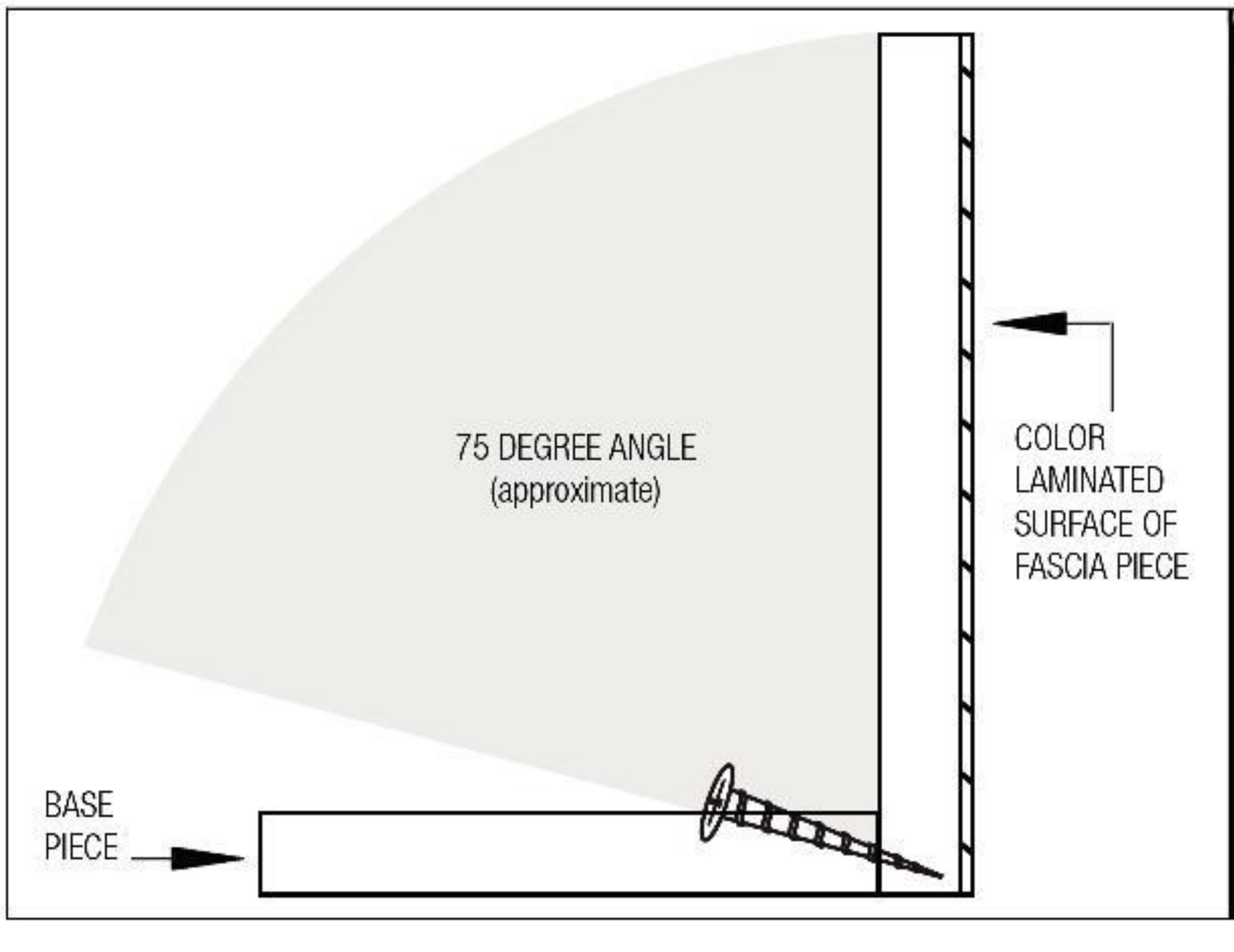


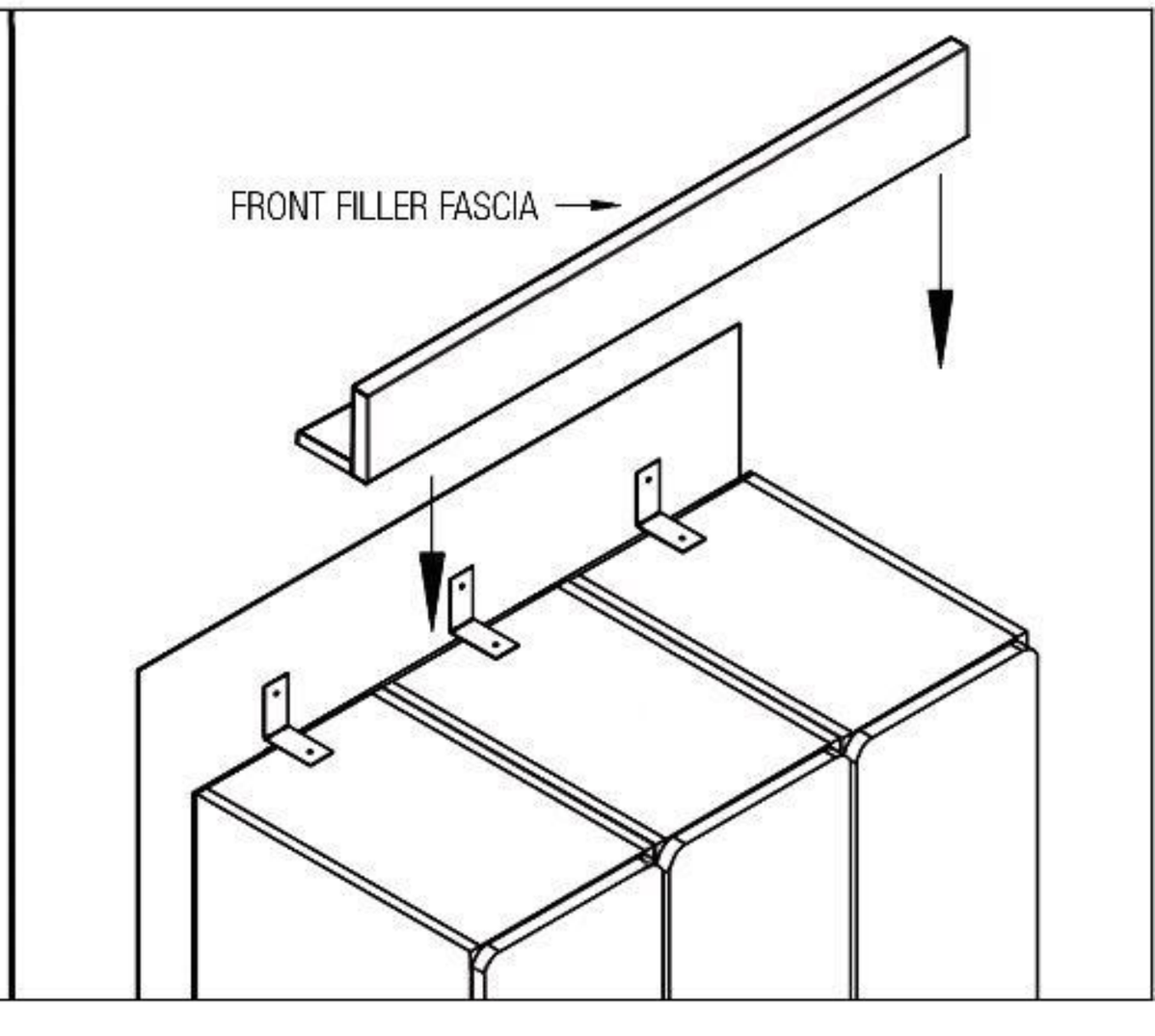


Align front of fascia with front edge of compartment (not the front edge of the door). Install the front filler fascia by fastening it to the lockers by installing screws from inside the lockers into the base of the front filler fascia. #8 x 1-1/4" long screws are provided for the installation.

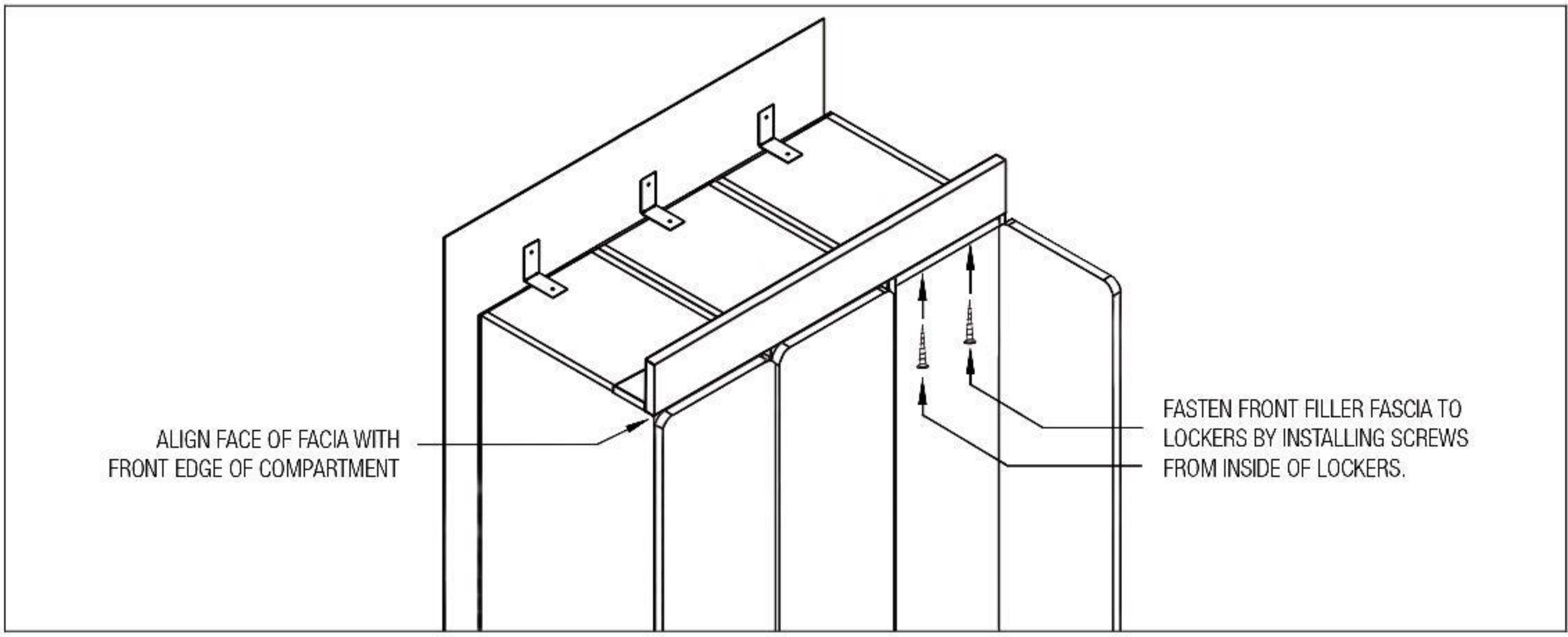

# 15" Wide Designer Locker Options - 20000 Series
## Installation Instructions

### Additional Shelves

An additional shelf is installed into a locker compartment by attaching two L-brackets to each side wall of the locker and to the bottom of the additional shelf. #10 x 3/4" long screws are provided for the installation.

