3900 Series Free-Standing Enclosures

For 3700 Series 4C Front Loading Recessed Mounted Horizontal Mailboxes

Installation Instructions

With its high quality design and construction, Salsbury's 3900 series 4C horizontal mailbox free-standing enclosure will provide years of maintenance free service. ***Please read this entire document before beginning installation.***

Installation Planning Notes

1. The free-standing enclosure shipped along with your 4C mailbox unit has been configured to meet the USPS height regulations.
2. The free-standing enclosure is shipped fully assembled with the exception of the front panel and the mailbox unit, which are installed after the enclosure is fastened to the floor or concrete pad.
3. Determine the location of each of the 3900 series free-standing enclosures along with the 3700 series mailbox units.
4. If necessary, construct the concrete pad on which the 3900 free-standing enclosure(s) will be mounted.
5. Due to the various mounting surfaces and subfloors to which the free-standing enclosure may be installed, mounting fasteners are not supplied.
6. Select the appropriate anchors or fasteners to attach the free-standing enclosure to the floor or other surface to which it will be mounted.
7. Provide a means for leveling the enclosure, if necessary.

Types of Fasteners Used

Type A, Fig. 1 – To fasten the front panel into the enclosure, use the #10x1/2" pan head self-drilling sheet metal screw (supplied).

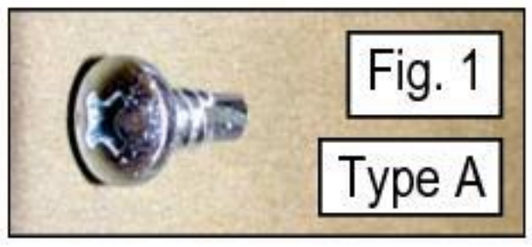

Type B, Fig. 2a – To fasten the sides and the bottom of the mailbox unit into the enclosure, use the #8x3/4" pan head self-tapping machine screw (supplied).

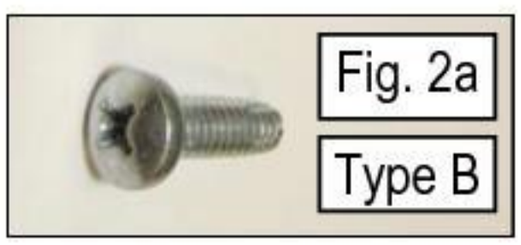

Mounting Free-Standing Enclosure to Floor

Place the enclosure into the selected position. Transfer mark the four (4) large hole locations in the horizontal bottom side flanges to the mounting surface. See Fig. 3. Remove the enclosure and make the holes for the installation fasteners. Install the installation fasteners. Position the rubber pads on the floor surface. See Fig. 4. Return the enclosure to the selected position on top of the rubber pads. Lock the enclosure down by completing the installation of the fasteners. The use of leveling nuts on stud anchors is suggested.

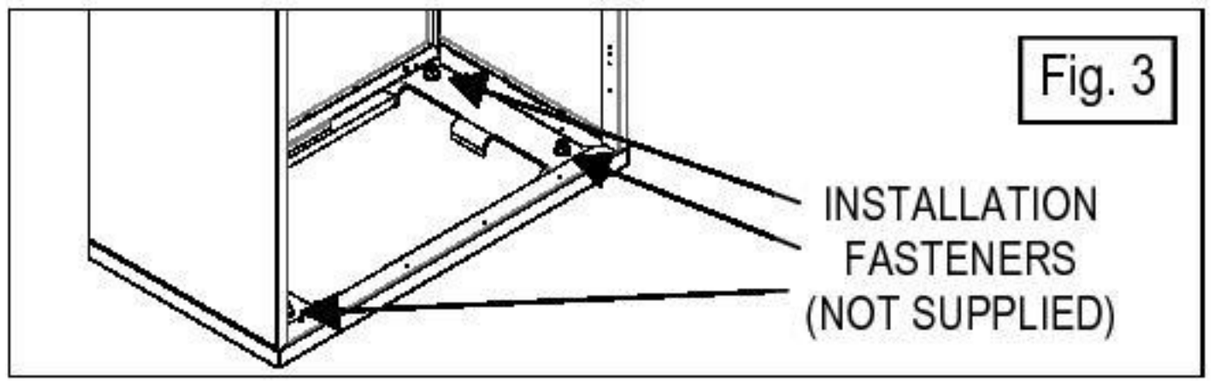

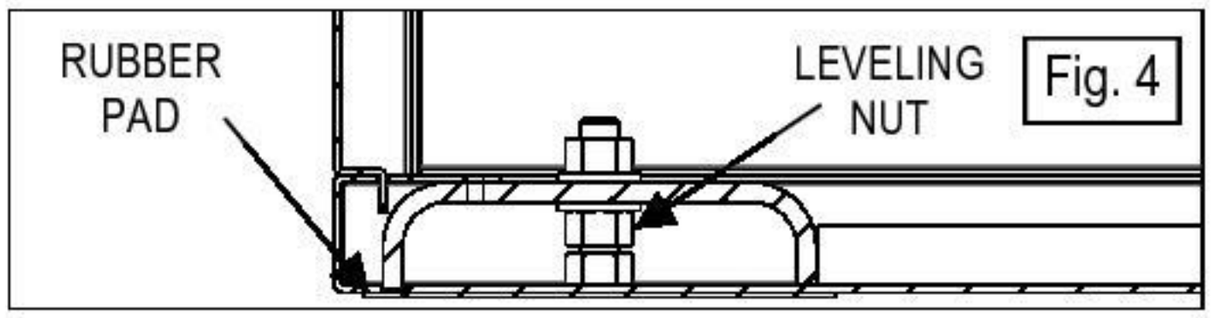

Installing Front Panel

Install the front panel at the lower end of the front of the enclosure. Use Type A screws. The quantity varies depending on the height and width of the front panel. See Fig. 5.

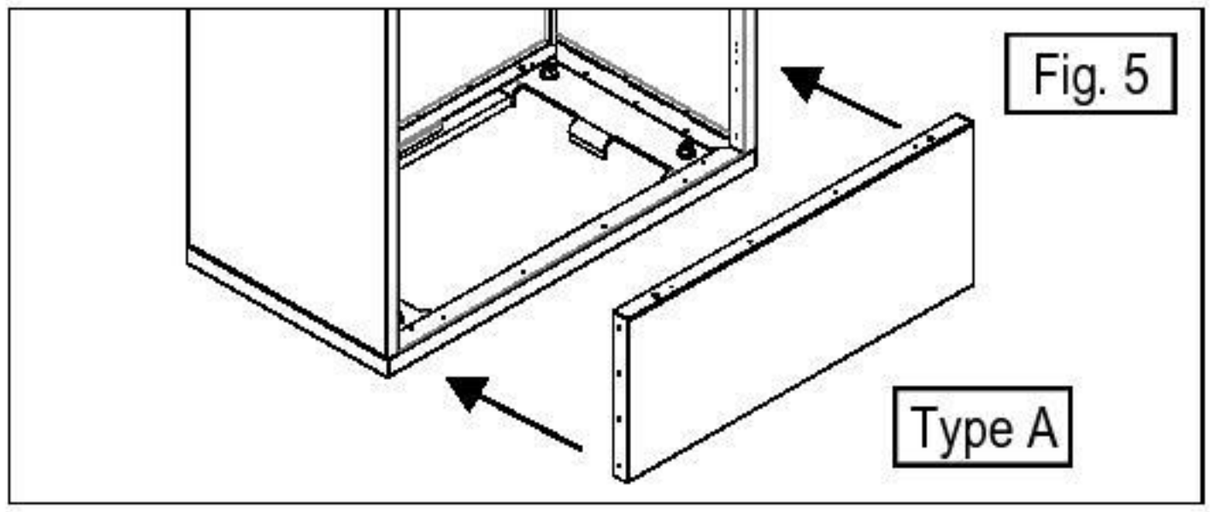

3900 Series Free-Standing Enclosures

For 3700 Series 4C Front Loading Recessed Mounted Horizontal Mailboxes

Installation Instructions

Installing Mailbox Unit

Lifting and installing the mailbox unit into the enclosure is a two (2) person operation. Open appropriate compartment doors to provide handholds. Lift the mailbox unit and carefully slide it into the enclosure until the front peripheral flange is flush against the front flanges of the enclosure. See Fig. 6.

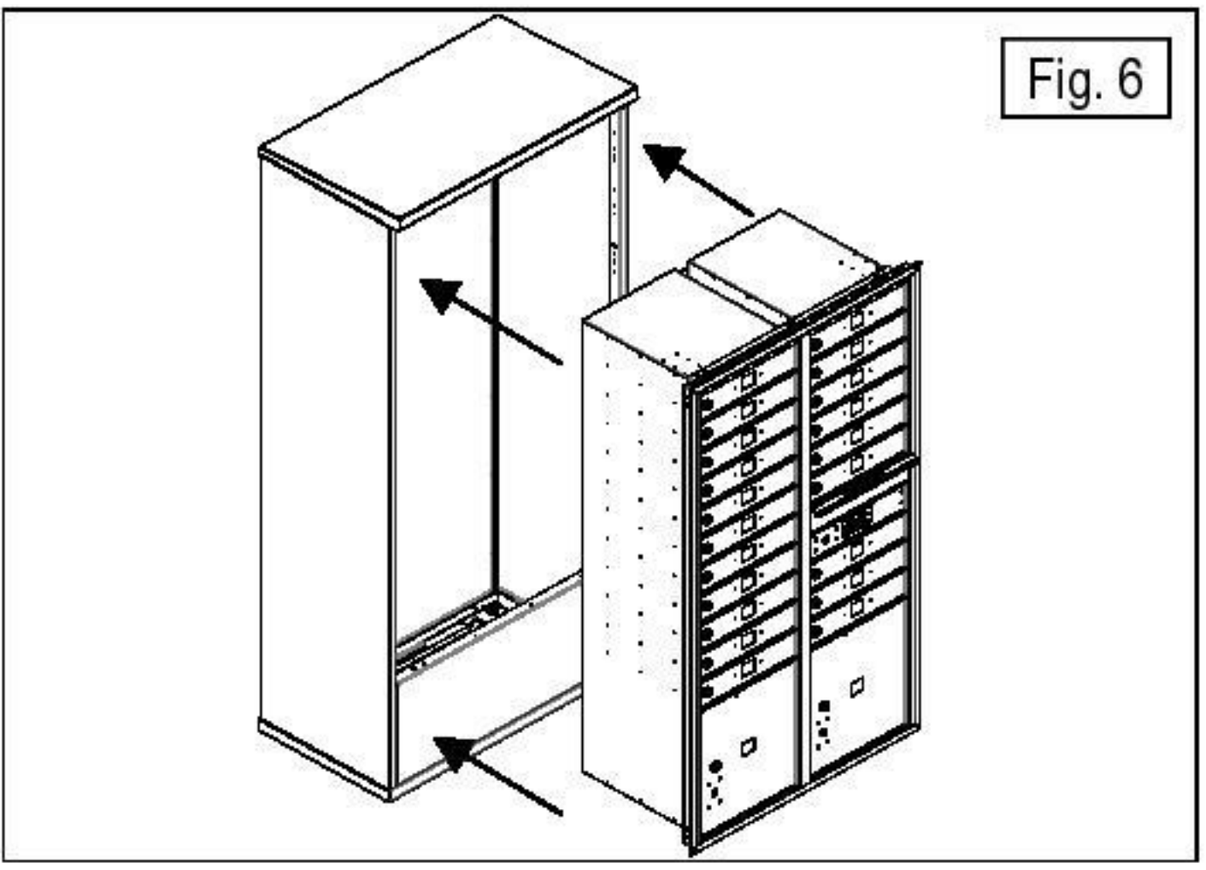

Fastening Mailbox Unit to Enclosure

Open the master doors of the mailbox unit until the hold-open rods at the top inside corners of the doors engage. Install Type B self-tapping machine screws (provided) through each counter bored hole in the bottom flange of the mailbox and through each slotted hole in the vertical flanges on the sides of the mailbox. See Fig. 7, Fig 8A and Fig 8B. The number of screws required varies depending on the height and width of the unit. A maximum height double column unit is shown.

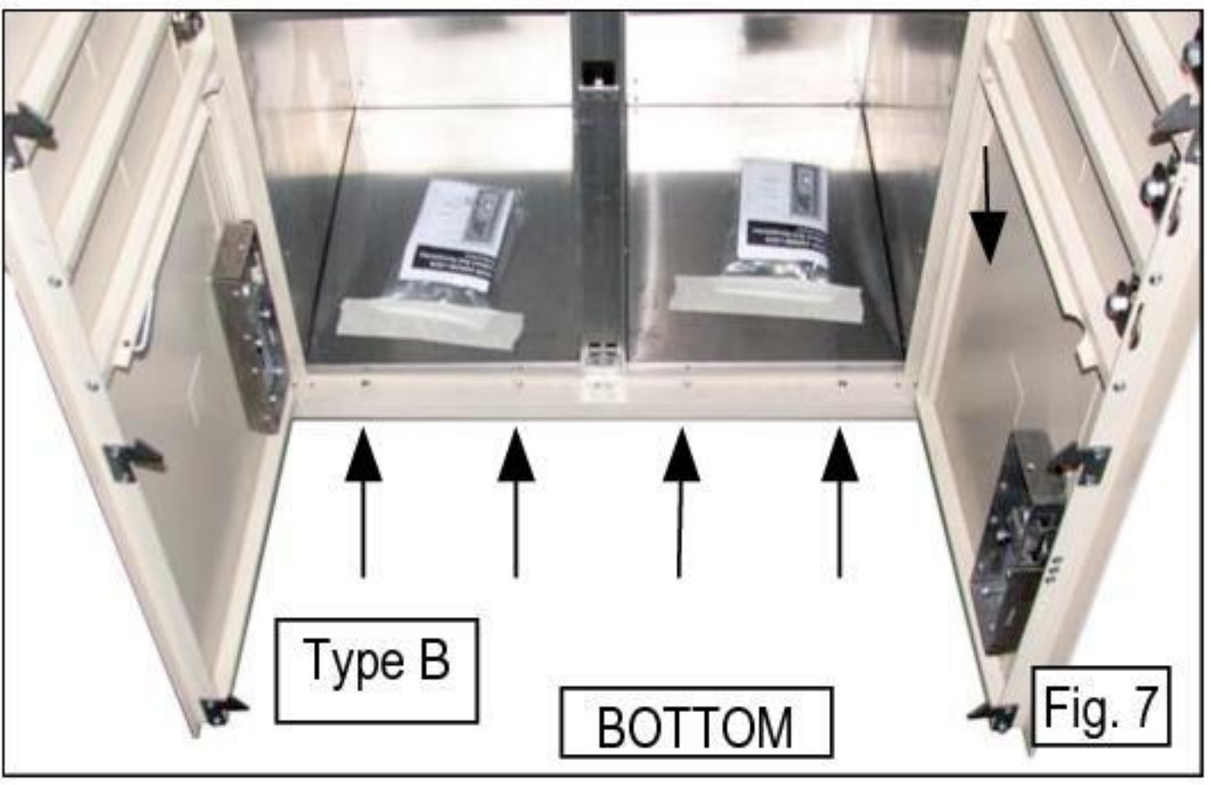

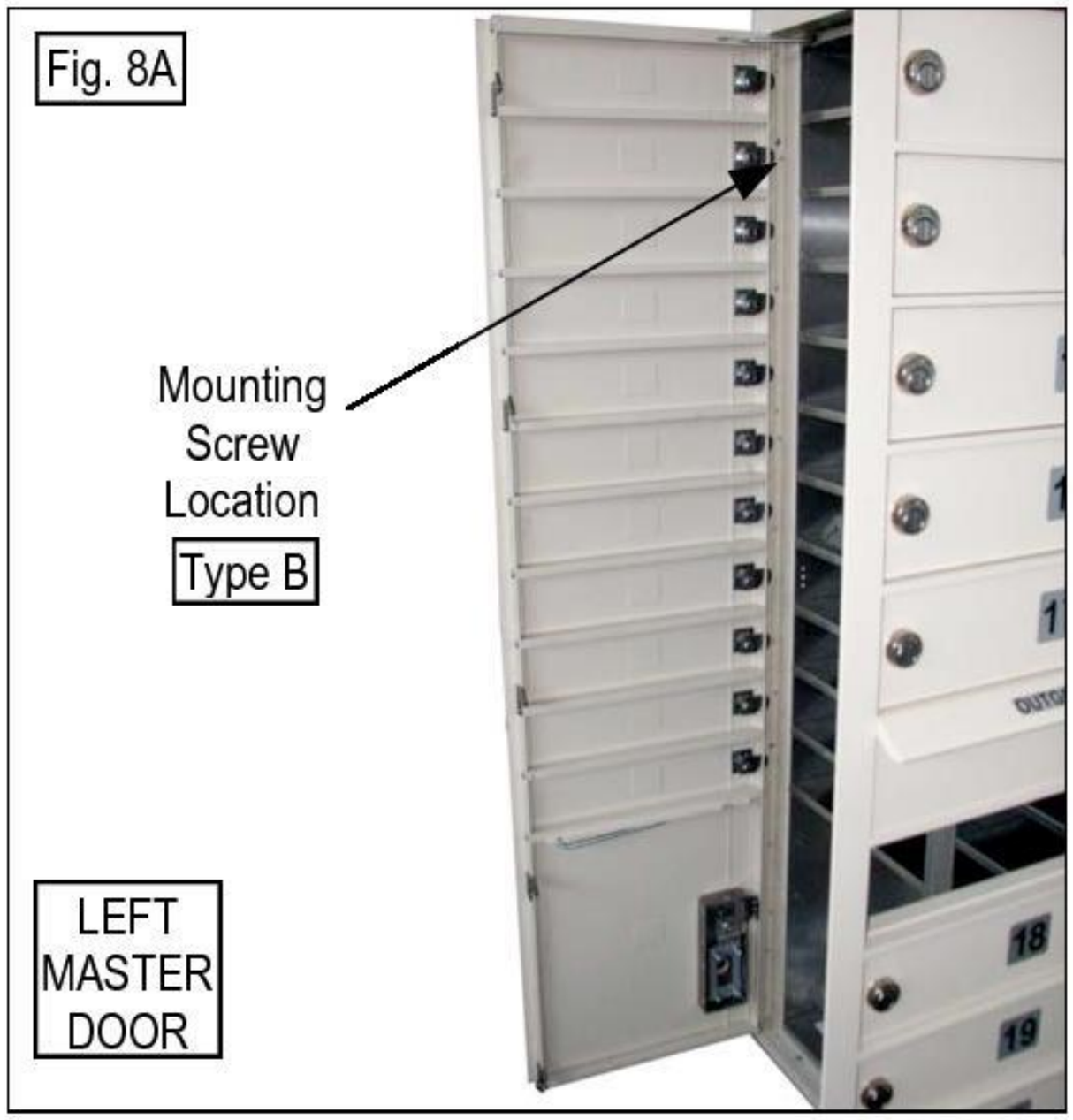

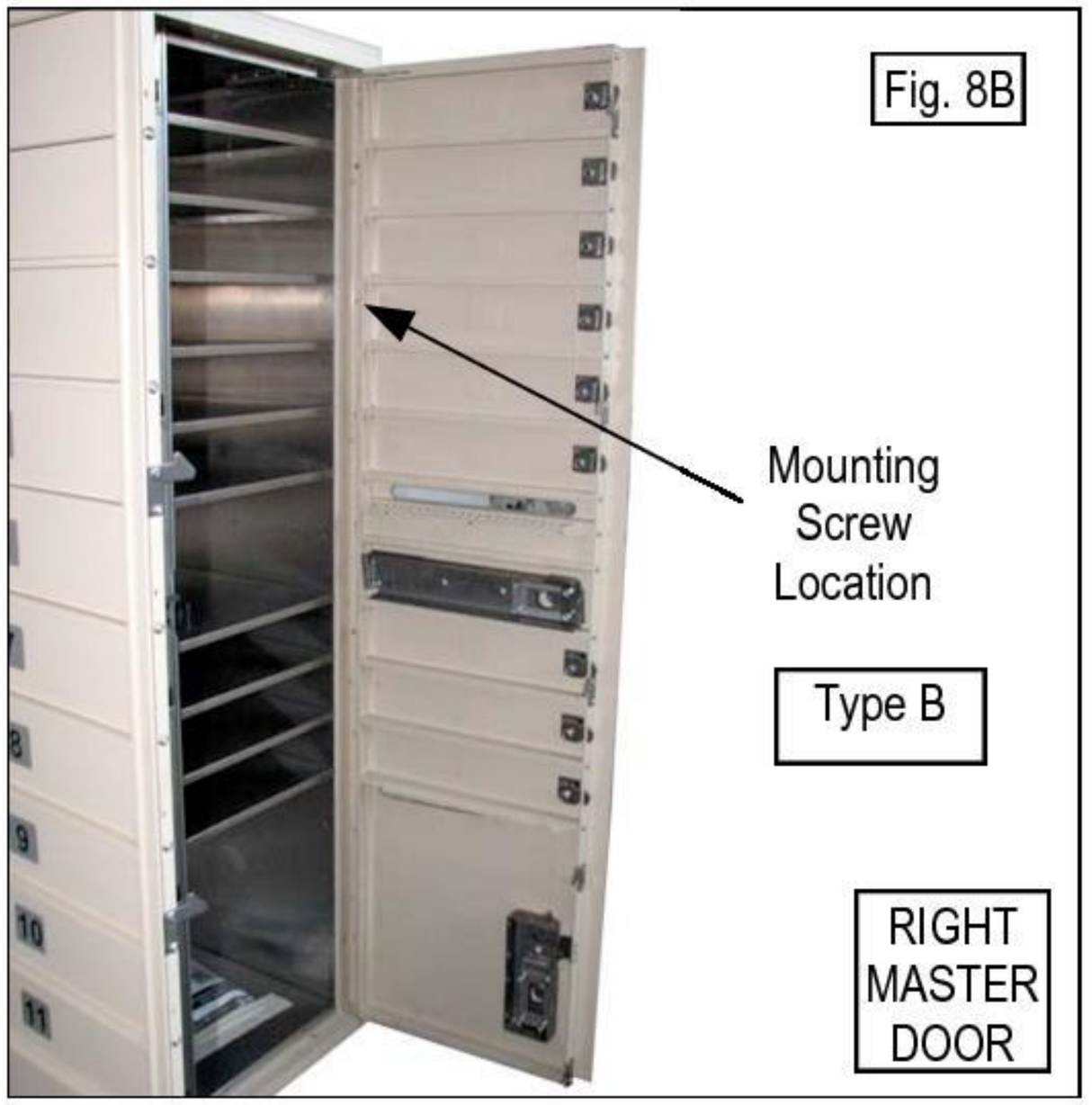

Close the master doors. The installation is now complete.