Eagle Rural Mailboxes – 4855E

Eagle Newspaper Holder on Standard or Decorative Mailbox Post Installation Instructions

U.S.P.S. APPROVED

Thank you for selecting Salsbury's 4855E eagle rural mailbox. This instruction sheet is for installing the 4855E eagle rural mailbox along with a 4815E eagle newspaper holder on a standard or decorative mailbox post. Other installation instructions are available for installing the mailbox on a standard mailbox post, or on a decorative mailbox post, installing the mailbox on spreaders, and installing the post in a concrete footing.

When you install a curbside or roadside mailbox, make sure that it is easily accessible to the mail carrier. By regulation it should be 41" to 45" from the ground or street surface up to the inside floor of the mailbox. The door should be set back 6" to 8" back from the front face of the curb or the road edge. However, you should check with your local postmaster to ensure that the mailbox is installed according to local regulations.

Newspaper Holder to Standard Mailbox Post Installation

Install four (4) 5/16"-18 x 2" long pan head bolts provided with the post through the four (4) square holes shown in the inside floor of the newspaper holder and through the four (4) tapped holes on the top plate of the standard mailbox post. Insert a Phillips head screw driver through each square hole directly above, and in the top of the newspaper holder, to tighten the pan head bolts.

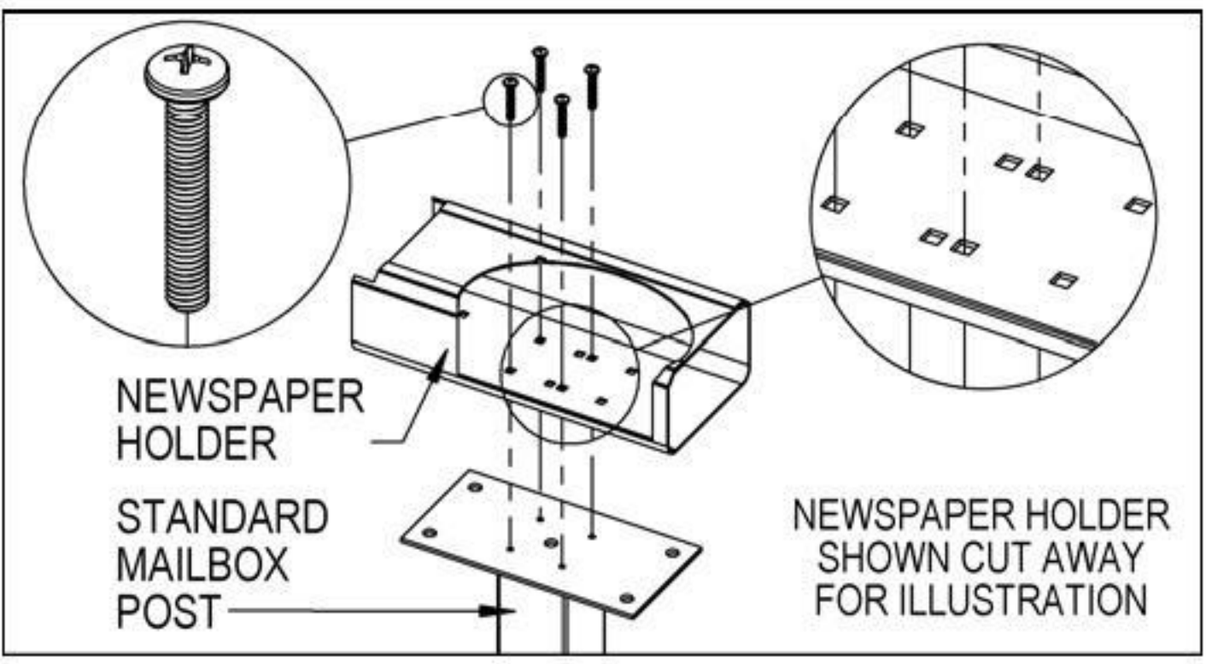

Mailbox Installation on a Newspaper Holder and Standard Mailbox Post

All hardware to attach the mailbox to the newspaper holder is included with the newspaper holder. To attach the mailbox to the newspaper holder, install four (4) 5/16"-18 X 3/4" long carriage bolts into (4) square holes in the floor of the mailbox and through the four (4) square holes shown on the top of the newspaper holder. Install 5/16" flat washers and 5/16"-18 hex nuts on the ends of the four (4) bolts protruding below the top of the newspaper holder. Cover the hex nuts with cap plugs. Installation is complete. Additional hardware provided is not needed and may be discarded.

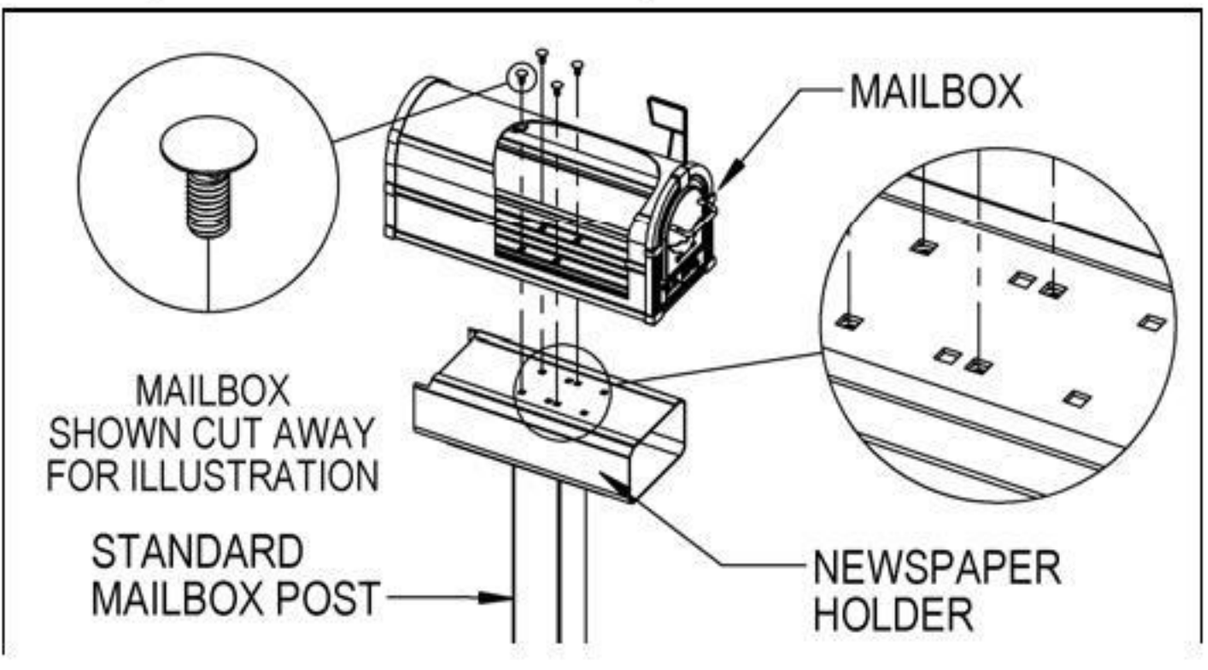

Newspaper Holder to Decorative Mailbox Post Installation

All hardware to attach the newspaper holder to the post is included with the post. To install the newspaper holder to the post, install six (6) 5/16"-18 X 3/4" long carriage bolts through the (6) square holes shown in the inside floor of newspaper holder and through the six (6) square holes on the top plate of the decorative post arm. Install 5/16" flat washers and 5/16"-18 hex nuts on the ends of the six (6) bolts protruding below the top plate of the decorative post arm. Cover the hex nuts with cap plugs.

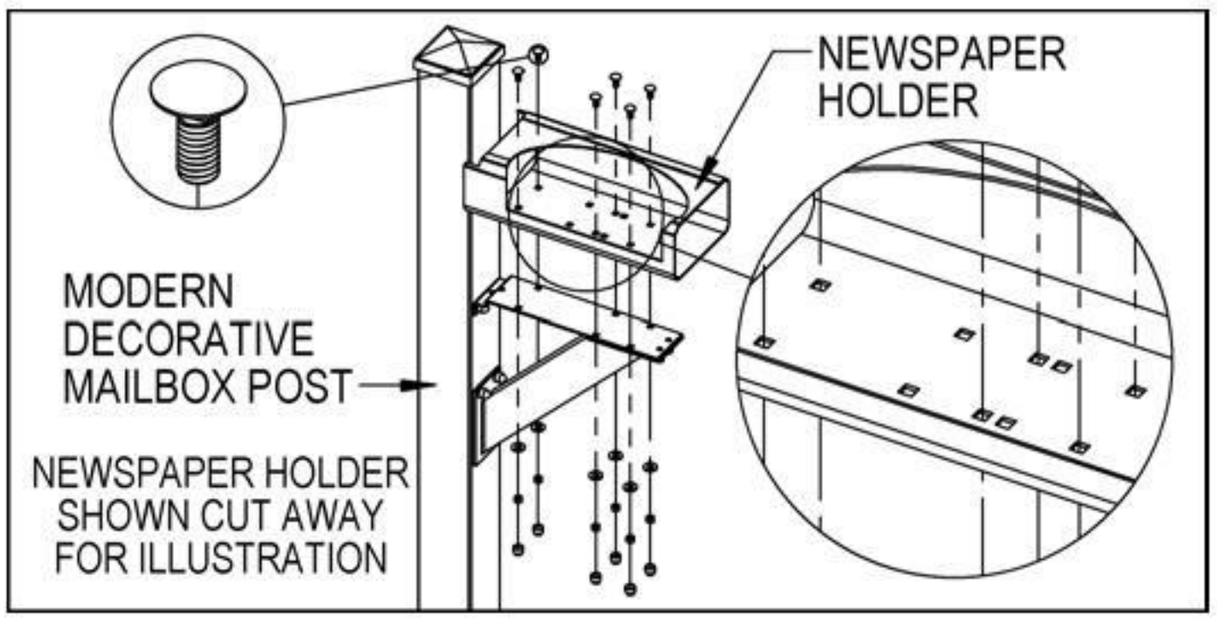

Mailbox Installation on a Newspaper Holder and Decorative Mailbox Post

All hardware to attach the mailbox to the newspaper holder is included with the newspaper holder. To attach the mailbox to the newspaper holder, install four (4) 5/16"-18 X 3/4" long carriage bolts into (4) square holes in the floor of the mailbox and through the four (4) square holes shown on the top of the newspaper holder. Install 5/16" flat washers and 5/16"-18 hex nuts on the ends of the four (4) bolts protruding below the top of the newspaper holder. Cover the hex nuts with cap plugs. Installation is complete. Additional hardware provided is not needed and may be discarded.

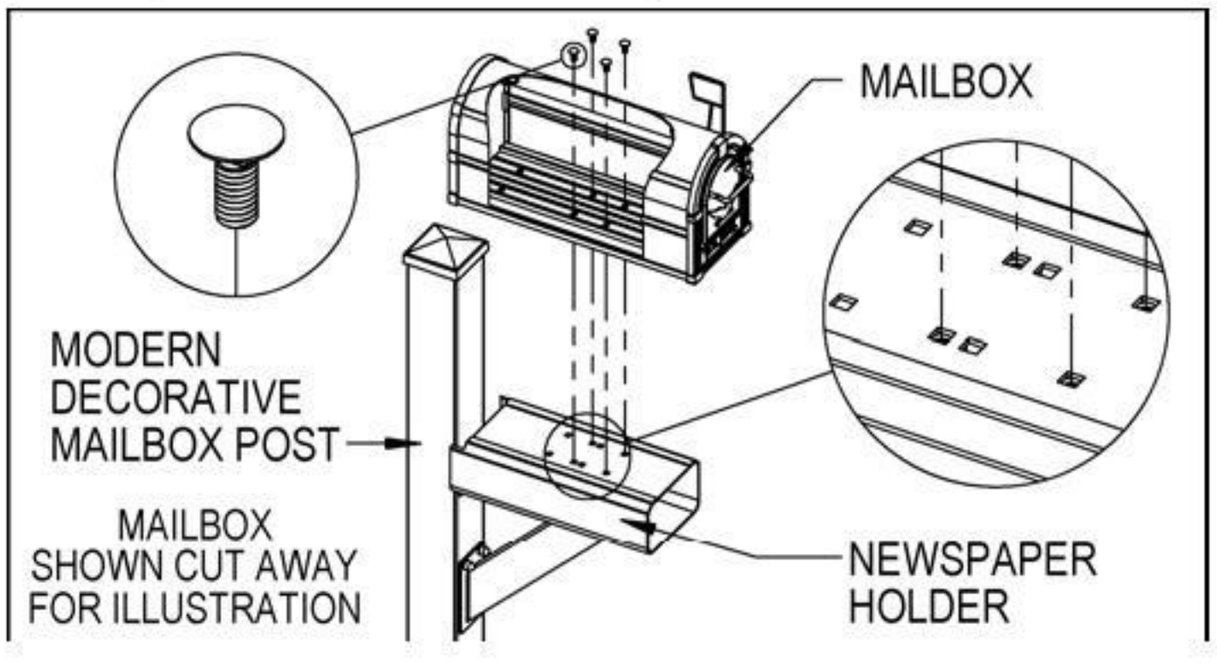

Eagle Rural Mailboxes – 4855E

Eagle Newspaper Holders on Deluxe Mailbox Post Installation Instructions

U.S.P.S. APPROVED

Installing Newspaper Holders on Deluxe Mailbox Posts

Thank you for selecting Salsbury Industries 4855E eagle rural mailbox.

This instruction sheet is for installing 4855E mailbox(es) on a Salsbury deluxe mailbox post with 4815E eagle newspaper holder(s). Other installation instructions are available for installing the mailboxes on a standard mailbox post or on a decorative mailbox post, installing the mailbox on spreaders, and mounting the post in a concrete footing.

When you install a curbside or roadside mailbox, make sure that it is easily accessible to the mail carrier. By regulation it should be 41" to 45" from the ground or street surface up to the inside floor of the mailbox. The door should be set back 6" to 8" from the front face of the curb or the road edge. However, you should check with your local postmaster to ensure that the mailbox is installed according to local regulations.

Newspaper Holder Installation to Deluxe Post

Installation of newspaper holders to each deluxe post, 4870 one-sided, or 4872, 4873 and 4874 two-sided, or 4875 bridge style is the same. Attach one newspaper holder to the 4870 one-sided post. Attach one additional newspaper holder to the 4872 two-sided post. Attach two additional newspaper holders to the 4873 two-sided post. Attach three additional newspaper holders to the 4874 two-sided post and four additional newspaper holders to the 4875 bridge style post. All hardware required to assemble the newspaper holders(s) to the deluxe mailbox post is provided with the post. To attach a newspaper holder to the post, install four (4) 5/16"-18 x 2" long pan head bolts through the four (4) square holes shown in the inside floor of the newspaper holder and through the four (4) tapped holes in the arm of the deluxe mailbox post. Insert a Phillips head screw driver through each square hole directly above, and in the top of the newspaper holder, to tighten the pan head bolts. Repeat these steps for the other newspaper holder(s).

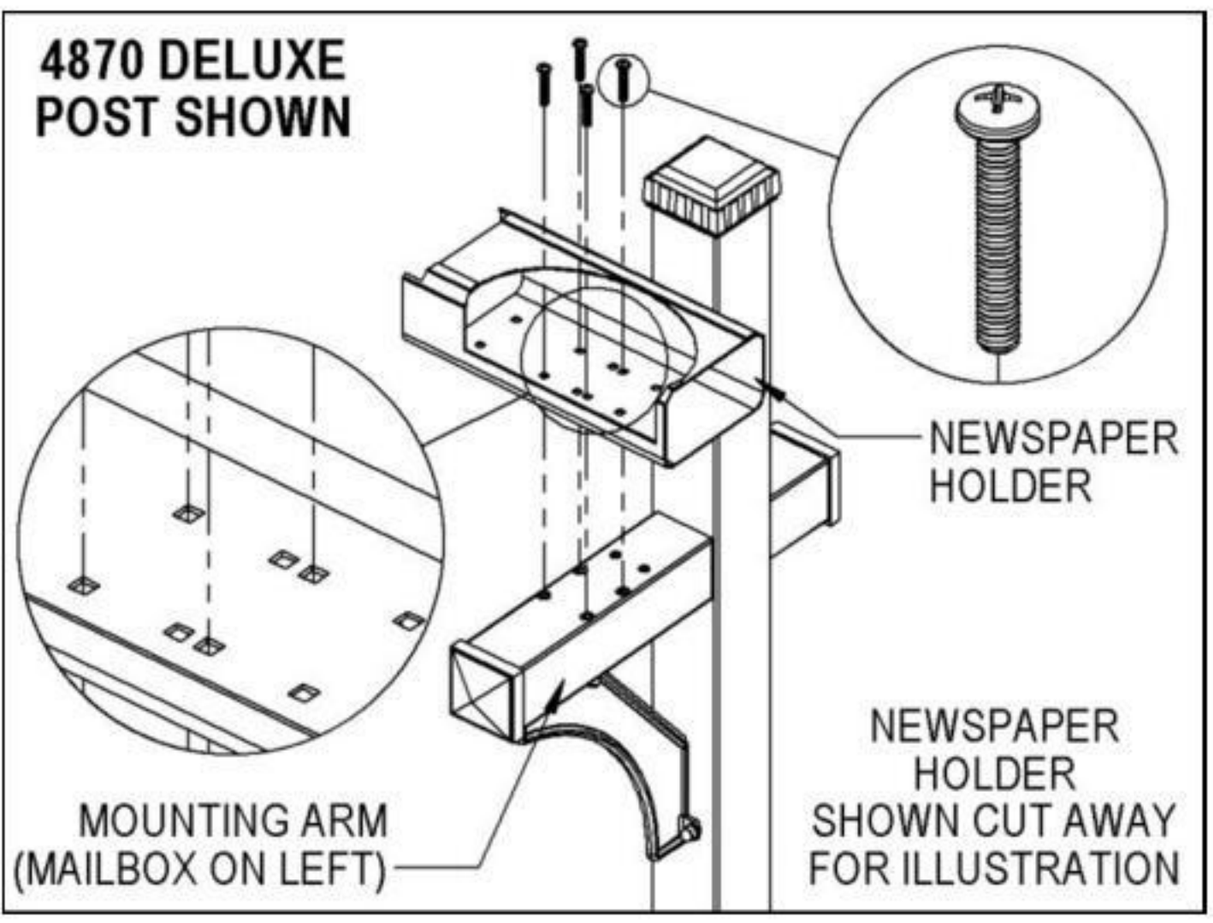

Mailbox Installation to Newspaper Holders

Installation of the mailbox to the newspaper holder on each deluxe post, 4870 one-sided, or 4872, 4873 and 4874 two-sided, or 4875 bridge style is the same. Attach one mailbox to the 4870 one-sided post. Attach one additional mailbox to the 4872 two-sided post. Attach two additional mailboxes to the 4873 two-sided post. Attach three additional mailboxes to the 4874 two-sided post and four additional mailboxes to the 4875 bridge style post. All hardware to attach the mailbox(es) to the newspaper holder(s) is included with the newspaper holder(s). To attach a mailbox to a newspaper holder, open the front door of the mailbox and install four (4) 5/16"-18 X 3/4" long carriage bolts into (4) square holes in the floor of the mailbox and through the four (4) square holes shown on the top of the newspaper holder. Install 5/16" flat washers and 5/16"-18 hex nuts on the ends of the four (4) bolts protruding below the top of the newspaper holder. Cover the hex nuts with cap plugs. Repeat these steps for the other mailbox(es). Installation is now complete. Additional hardware provided is not needed and may be discarded.

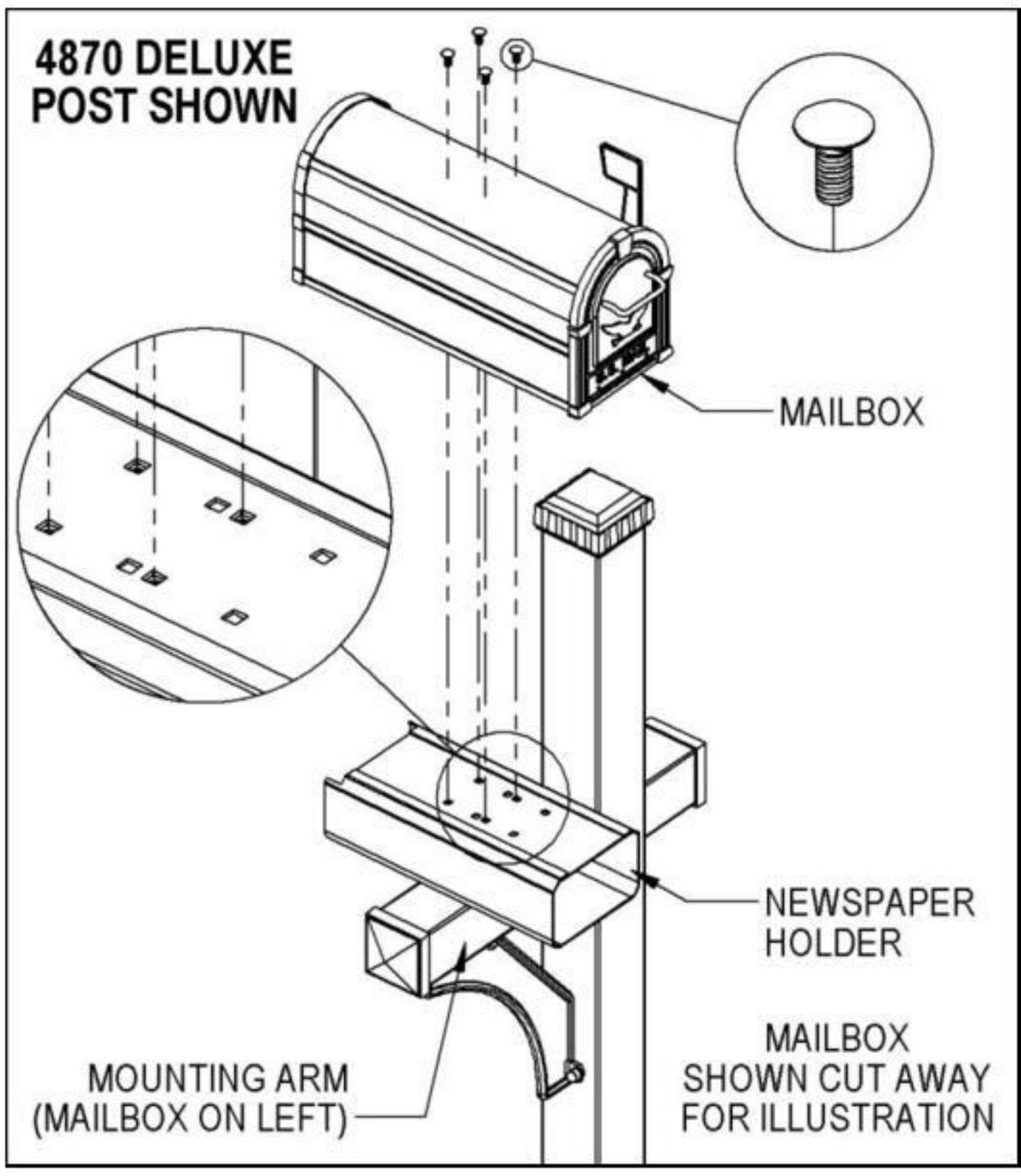

Note: On the 4870 deluxe mailbox post, the longer mounting arm which accommodates the newspaper holder and mailbox can be on either the left or right side. When attaching the post to the ground, position the post so the longer mounting arm is on the side desired. Then mount the newspaper holder and mailbox on the mounting arm with the mailbox facing the street or roadway.

Eagle Rural Mailboxes – 4855E

2-Wide and 4-Wide Spreader with Eagle Newspaper Holders on a Standard Mailbox Post Installation Instructions

U.S.P.S. APPROVED

Installing Mailboxes on 2-Wide & 4-Wide Spreader with Newspaper Holders on a Standard Mailbox Post

Thank you for selecting Salsbury's 4855E eagle rural mailbox.

This instruction sheet is for installing 4855E eagle rural mailboxes on 2-wide and 4-wide spreaders with 4815E eagle newspaper holders and a standard mailbox post. Different instruction sheets are available for installing 4855E eagle rural mailboxes on 3-wide or 5-wide spreaders with 4815E eagle newspaper holders and a standard mailbox post. Other installation instructions are available for installing the mailboxes and spreaders with newspaper holders on a modern decorative mailbox post, mounting a single mailbox on a decorative or standard mailbox post, mounting a single newspaper holder, and mounting the post in a concrete footing.

When you install a curbside or roadside mailbox, make sure that it is easily accessible to the mail carrier. By regulation it should be 41" to 45" from the ground or street surface up to the inside floor of the mailbox. The door should be set back 6" to 8" back from the front face of the curb or the road edge. However, you should check with your local postmaster to ensure that the mailbox is installed according to local regulations.

Spreader Installation to Standard Post

The installation of the 2-wide or 4-wide spreader to the standard mailbox post is the same. All hardware to attach the spreader to the standard mailbox post is included with the spreader. To attach the spreader to the standard mailbox post, install four (4) 5/16"-18 X 1" long hex flange head bolts through the four (4) center square holes of the spreader and through the four (4) tapped holes on the top plate of the standard mailbox post. Cover the hex flange head bolts with cap plugs.

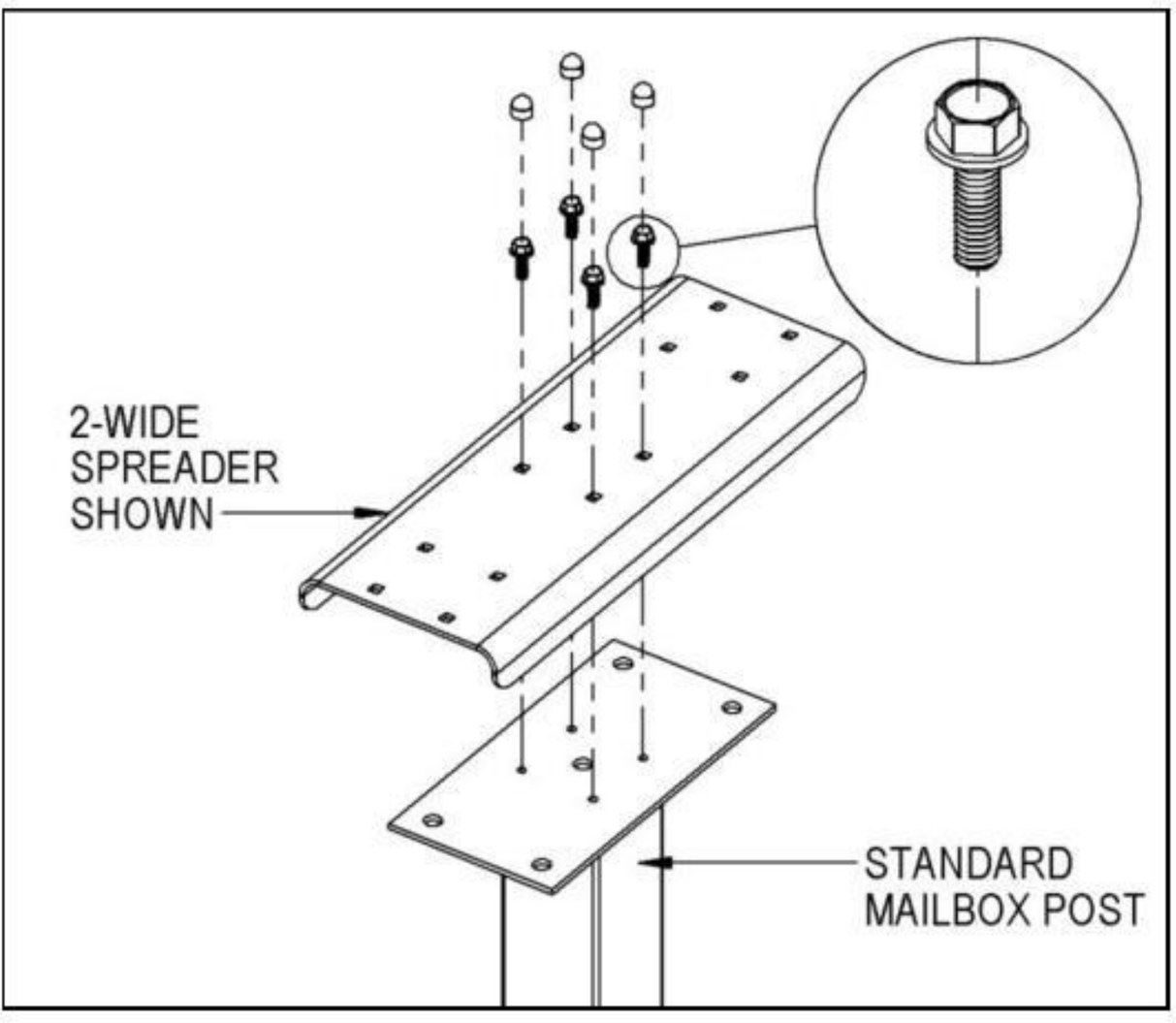

Newspaper Holders Installation to Spreader

Installation of newspaper holders to the 2-wide or 4-wide spreader is the same. Attach two (2) additional newspaper holders to the 4-wide spreader. All hardware to attach the newspaper holders to the spreader is included with the spreader. To attach a newspaper holder to the spreader, install four (4) 5/16"-18 x 1-3/4" long carriage bolts through the four (4) square holes shown in the inside floor of the newspaper holder and through the four (4) corresponding holes on the spreader. Install 5/16" flat washers and 5/16"-18 hex nuts on the ends of the four (4) bolts protruding below the bottom of the spreader. Repeat these steps for the other newspaper holder(s).

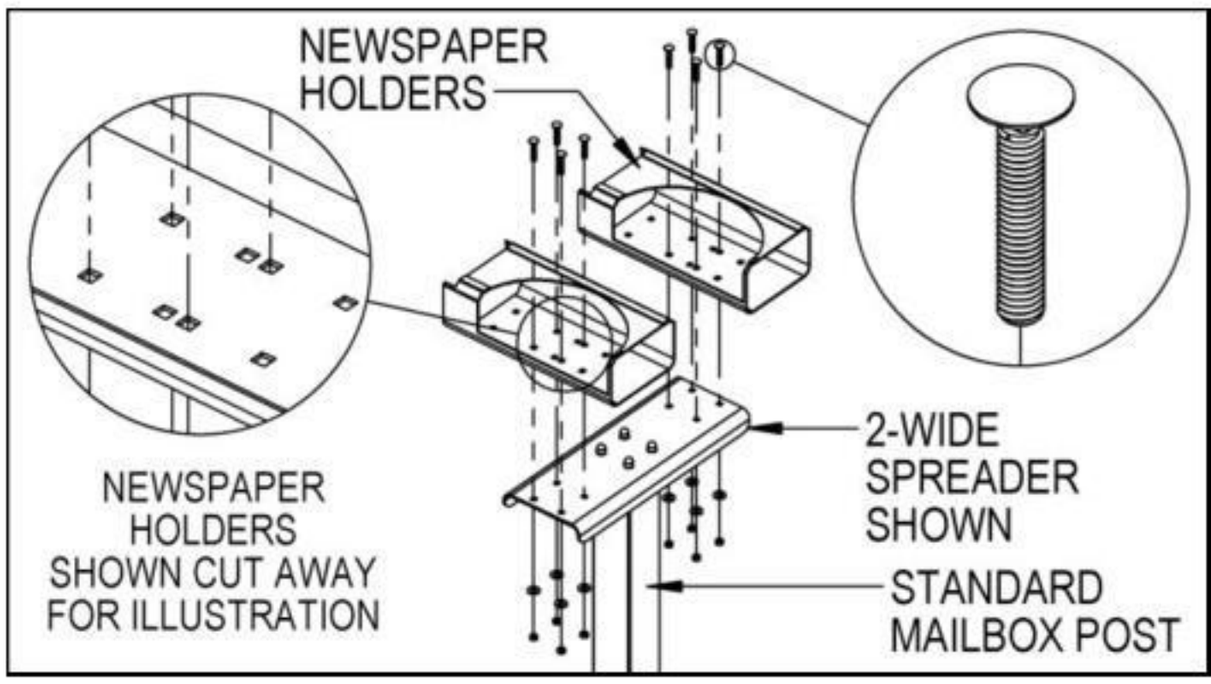

Mailbox Installation to Newspaper Holders

Installation of the mailbox to the newspaper holder is the same on the 2-wide or 4-wide spreader. Attach two (2) additional mailboxes to the newspaper holders on the 4-wide spreader. All hardware to attach the mailboxes to the newspaper holders is included with the newspaper holders. To attach a mailbox to a newspaper holder, install four (4) 5/16"-18 X 3/4" long carriage bolts into (4) square holes in the floor of the mailbox and through the four (4) square holes shown on the top of the newspaper holder. Install 5/16" flat washers and 5/16"-18 hex nuts on the ends of the four (4) bolts protruding below the top of the newspaper holder. Cover the hex nuts with cap plugs. Repeat these steps for the other mailbox(es). Installation is now complete. Additional hardware provided is not needed and may be discarded.

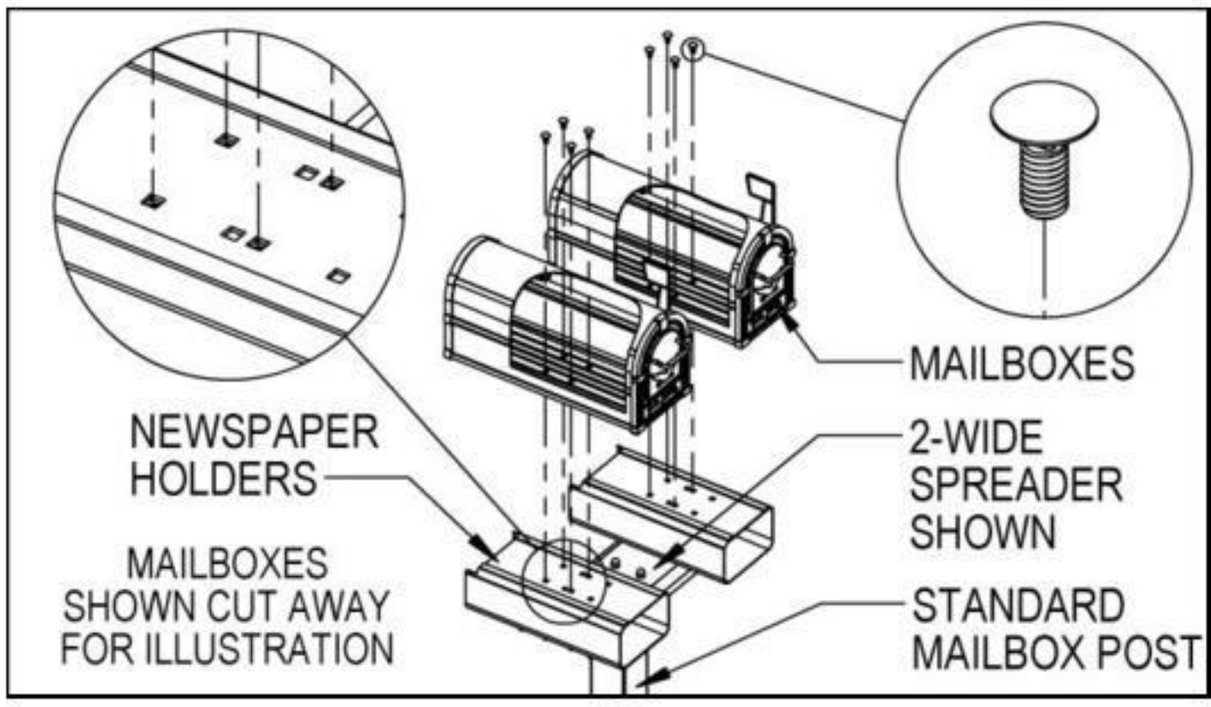

Eagle Rural Mailboxes – 4855E

3-Wide Spreader with Eagle Newspaper Holders on a Standard Mailbox Post Installation Instructions

U.S.P.S. APPROVED

Installing Mailboxes on Spreader with Newspaper Holders on a Standard Mailbox Post

Thank you for selecting Salsbury's 4855E eagle rural mailbox.

This instruction sheet is for installing 4855E eagle rural mailboxes on a 3-wide spreader with 4815E eagle newspaper holders and a standard mailbox post. Different instruction sheets are available for installing 4855E eagle rural mailboxes on 2-wide, 4-wide or 5-wide spreaders with 4815E eagle newspaper holders and a standard mailbox post. Other installation instructions are available for installing the mailboxes and spreaders with newspaper holders on a modern decorative mailbox post, mounting a single mailbox on a decorative or standard mailbox post, mounting a single newspaper holder, and mounting the post in a concrete footing.

When you install a curbside or roadside mailbox, make sure that it is easily accessible to the mail carrier. By regulation it should be 41" to 45" from the ground or street surface up to the inside floor of the mailbox. The door should be set back 6" to 8" back from the front face of the curb or the road edge. However, you should check with your local postmaster to ensure that the mailbox is installed according to local regulations.

Spreader and Newspaper Holders Installation to Standard Post

Attaching the spreader to the standard mailbox post requires simultaneously attaching the center newspaper holder to the spreader and to the standard mailbox post. Start by installing four (4) 5/16"-18 x 2" long pan head bolts provided with the post through the four (4) square holes shown in the inside floor of the center newspaper holder, through the four (4) center square holes in top of the spreader, and through the four (4) tapped holes on the top plate of the standard mailbox post. Insert a Phillips head screw driver through each square hole directly above, and in the top of the newspaper holder, to tighten the pan head bolts.

All hardware to attach the remaining two newspaper holders to the spreader is included with the spreader. To attach an additional newspaper holder, install four (4) 5/16"-18 x 1-3/4" long carriage bolts through the four (4) square holes shown in the inside floor of the newspaper holder and through the corresponding square holes in top of the spreader. Install 5/16" flat washers and 5/16"-18 hex nuts on the ends of the four (4) bolts protruding below the bottom of the spreader. Repeat these steps for the remaining newspaper holder.

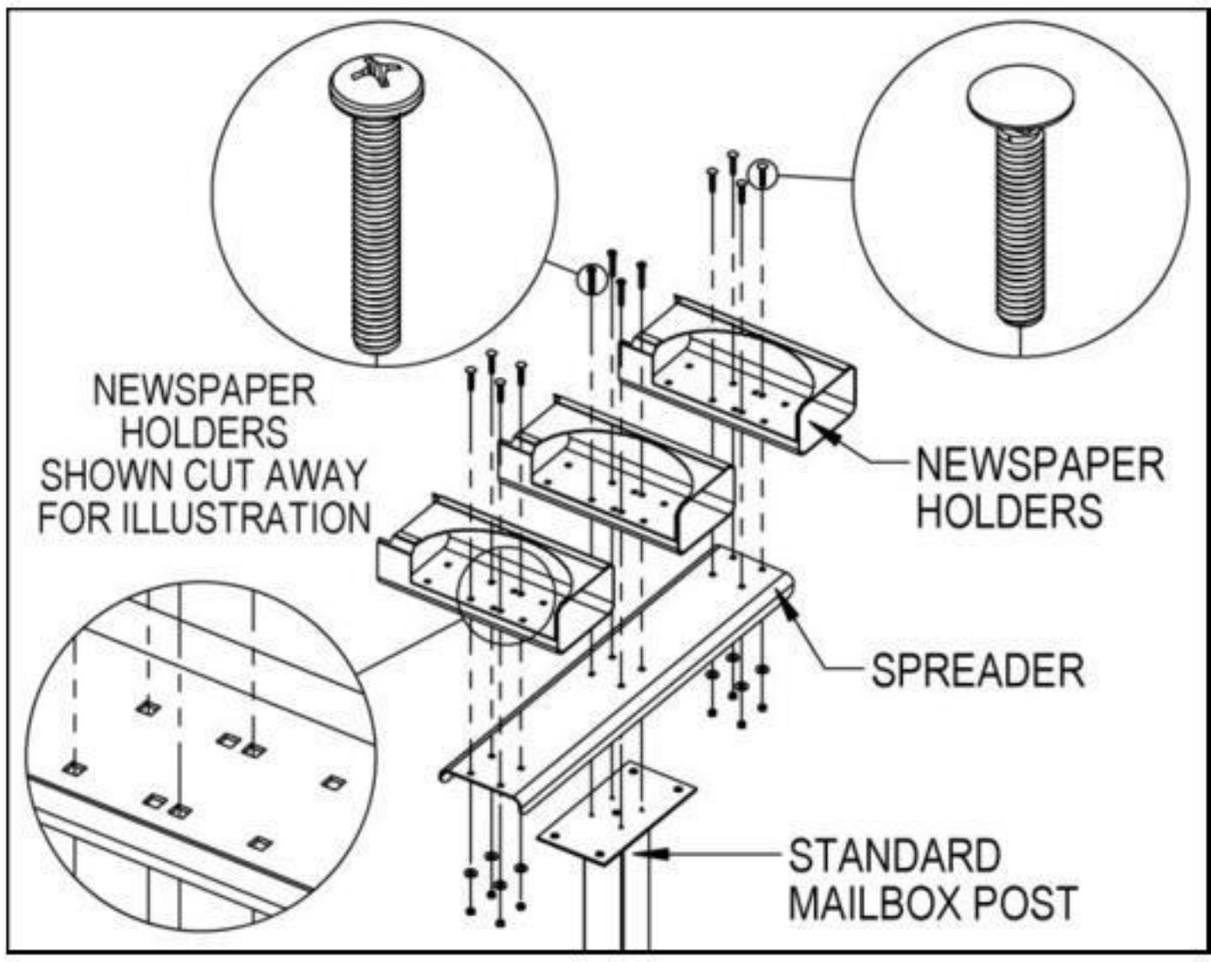

Mailbox Installation to Newspaper Holders

All hardware to attach the mailboxes to the newspaper holders is included with the newspaper holders. To attach a mailbox to a newspaper holder, install four (4) 5/16"-18 X 3/4" long carriage bolts into (4) square holes in the floor of the mailbox and through the four (4) square holes shown on the top of the newspaper holder. Install 5/16" flat washers and 5/16"-18 hex nuts on the ends of the four (4) bolts protruding below the top of the newspaper holder. Cover the hex nuts with cap plugs. Repeat these steps for the other mailboxes. Installation is now complete. Additional hardware provided is not needed and may be discarded.

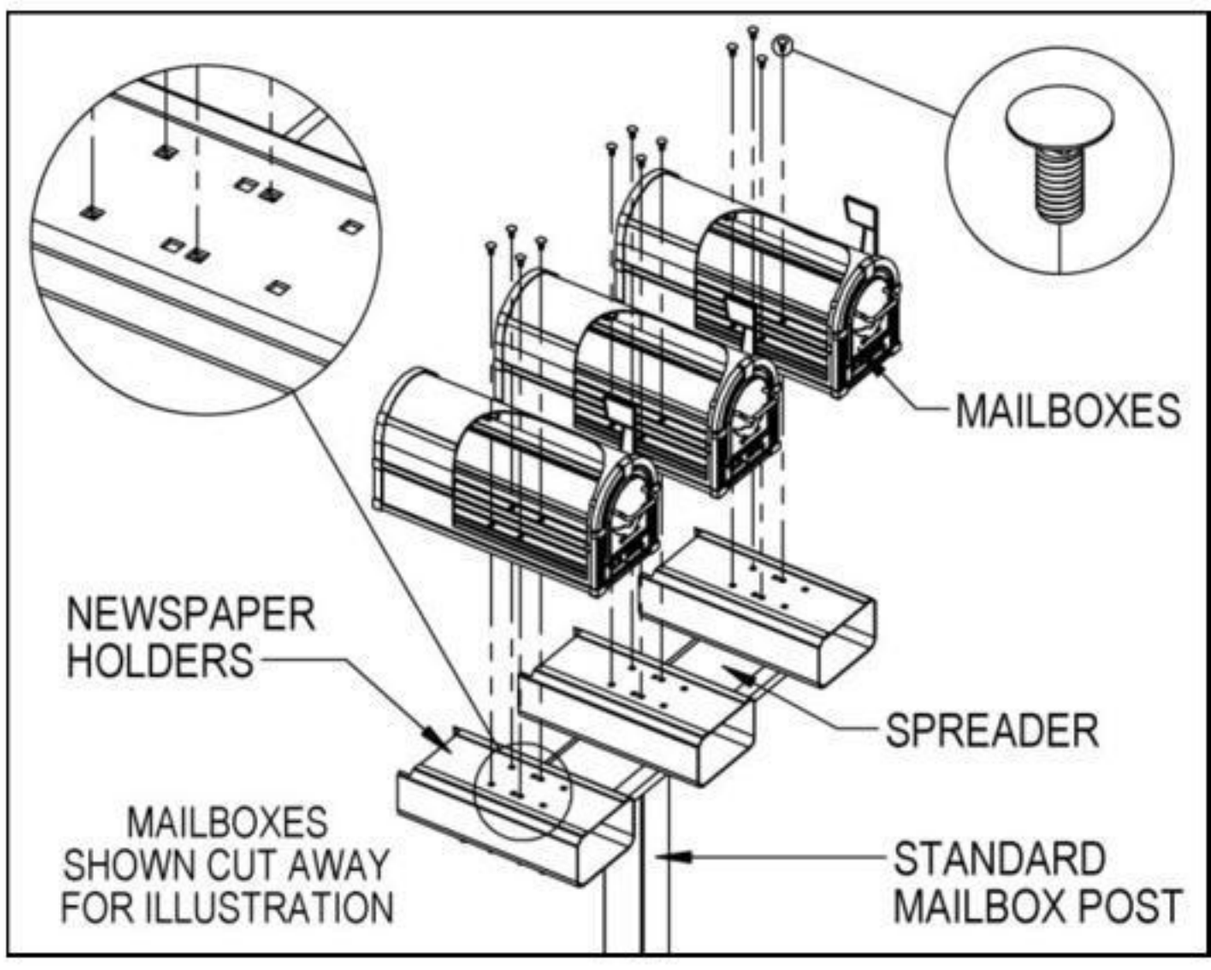

Eagle Rural Mailboxes – 4855E

5-Wide Spreader with Eagle Newspaper Holders on a Standard Mailbox Post Installation Instructions

U.S.P.S. APPROVED

Installing Mailboxes on Spreader with Newspaper Holders on a Standard Mailbox Post

Thank you for selecting Salsbury's 4855E eagle rural mailbox.

This instruction sheet is for installing 4855E eagle rural mailboxes on a 5-wide spreader with 4815E eagle newspaper holders and a standard mailbox post. Different instruction sheets are available for installing 4855E eagle rural mailboxes on 2-wide, 3-wide or 4-wide spreaders with 4815E eagle newspaper holders and a standard mailbox post. Other installation instructions are available for installing the mailboxes and spreaders with newspaper holders on a modern decorative mailbox post, mounting a single mailbox on a decorative or standard mailbox post, mounting a single newspaper holder, and mounting the post in a concrete footing.

When you install a curbside or roadside mailbox, make sure that it is easily accessible to the mail carrier. By regulation it should be 41" to 45" from the ground or street surface up to the inside floor of the mailbox. The door should be set back 6" to 8" back from the front face of the curb or the road edge. However, you should check with your local postmaster to ensure that the mailbox is installed according to local regulations.

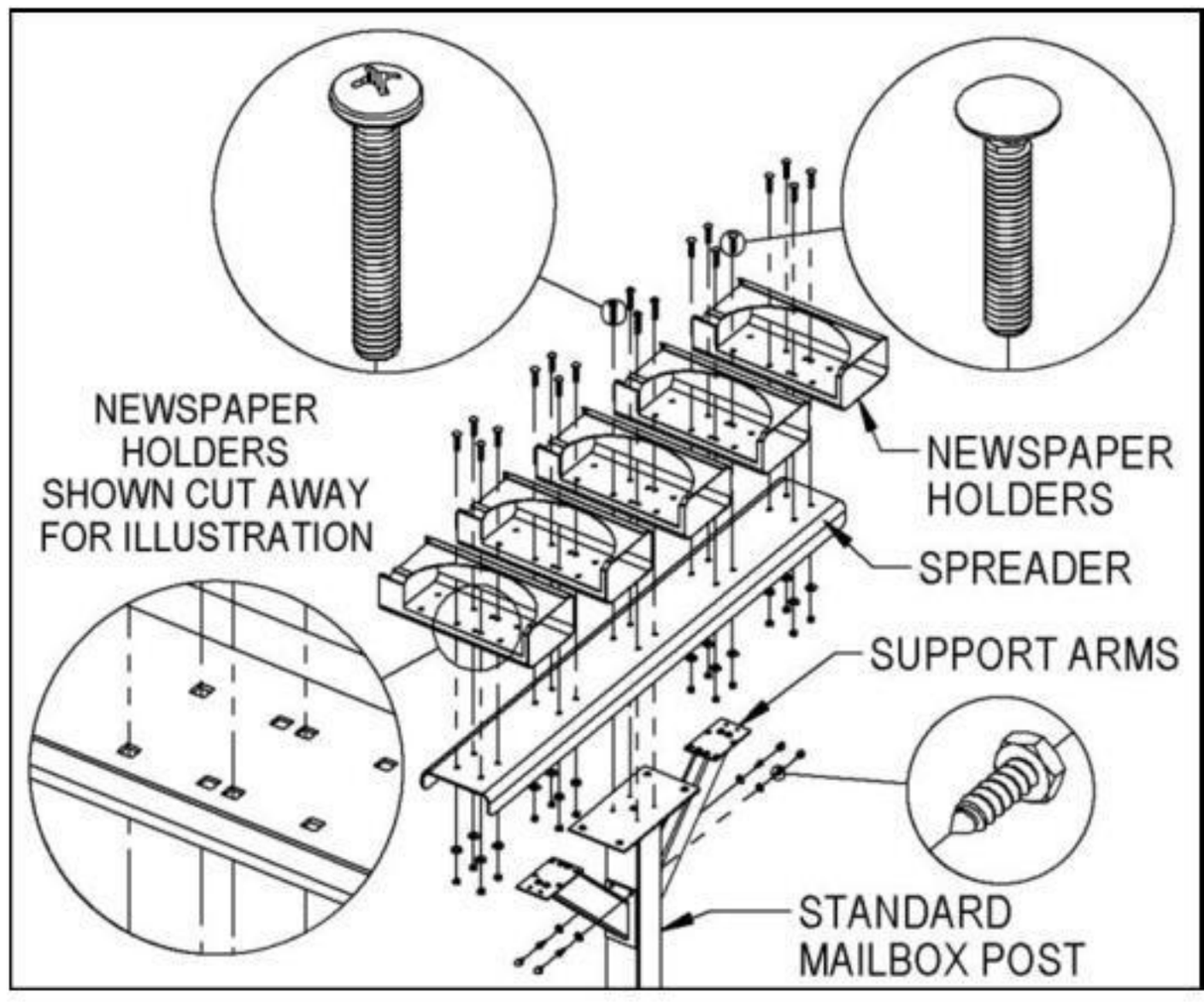

Spreader and Newspaper Holders Installation to Standard Post

Attaching the spreader to the standard mailbox post requires simultaneously attaching the center newspaper holder to the spreader and to the standard mailbox post. Start by installing four (4) 5/16"-18 x 2" long pan head bolts provided with the post through the four (4) square holes shown in the inside floor of the center newspaper holder, through the four (4) center square holes in top of the spreader, and through the four (4) tapped holes on the top plate of the standard mailbox post. Insert a Phillips head screw driver through each square hole directly above, and in the top of the newspaper holder, to tighten the pan head bolts.

All hardware to attach the remaining four newspaper holders to the spreader is included with the spreader. Next attach an additional newspaper holder adjacent to the center newspaper holder. Install four (4) 5/16"-18 x 1-3/4" long carriage bolts through the four (4) square holes shown in the inside floor of the newspaper holder, through the corresponding square holes in top of the spreader and through the corresponding square holes in the top plate of a support arm (supplied with spreader). Install 5/16" flat washers and 5/16"-18 hex nuts on the ends of the four (4) bolts protruding below the bottom of the support arm. Complete the installation of the support arm by drilling a 3/16" diameter hole though each hole in the vertical plate of the support arm and through the post. Install 1/4" flat washers and 1/4" x 1" long lag screws into the post. Cover the lag screws with cap plugs. Repeat these steps for the other newspaper holder adjacent to the center mailbox.

To install an outermost newspaper holder, install four (4) 5/16"-18 x 1-3/4" long carriage bolts through the four (4) square holes shown in the inside floor of the newspaper holder and through the corresponding square holes in top of the spreader. Install 5/16" flat washers and 5/16"-18 hex nuts on the ends of the four (4) bolts protruding below the bottom of the spreader. Repeat these steps for the remaining newspaper holder.

Mailbox Installation to Newspaper Holders

All hardware to attach the mailboxes to the newspaper holders is included with the newspaper holders. To attach a mailbox to a newspaper holder, install four (4) 5/16"-18 X 3/4" long carriage bolts into (4) square holes in the floor of the mailbox and through the four (4) square holes shown on the top of the newspaper holder. Install 5/16" flat washers and 5/16"-18 hex nuts on the ends of the four (4) bolts protruding below the top of the newspaper holder. Cover the hex nuts with cap plugs. Repeat these steps for the other mailboxes. Installation is now complete. Additional hardware provided is not needed and may be discarded.

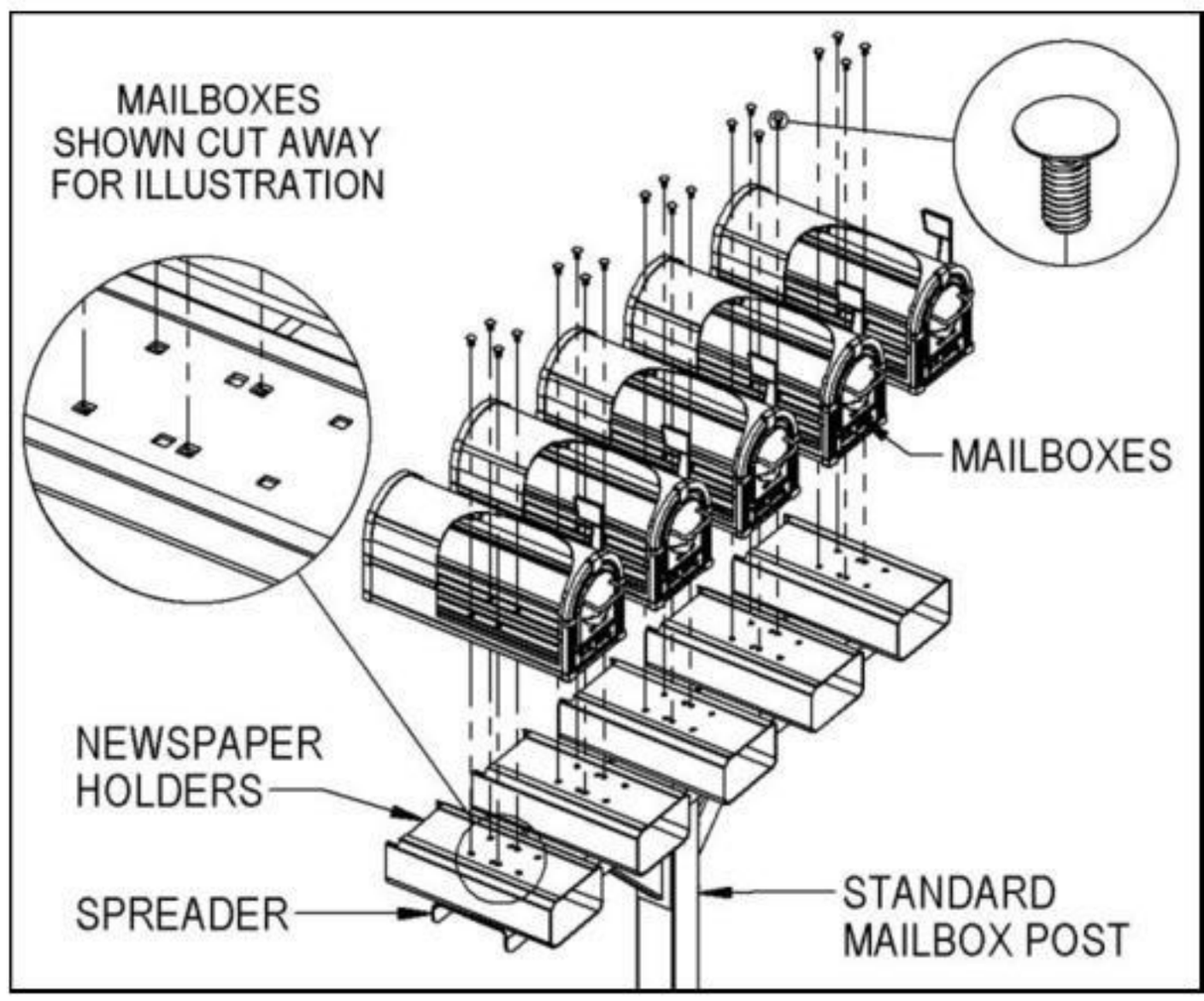

Eagle Rural Mailboxes – 4855E

2-Wide Spreader with Eagle Newspaper Holders on a Modern Decorative Mailbox Post Installation Instructions

U.S.P.S. APPROVED

Installing Mailboxes on a 2-Wide Spreader with Newspaper Holders on a Modern Decorative Mailbox Post

Thank you for selecting Salsbury's 4855E eagle rural mailbox.

This instruction sheet is for installing 4855E eagle rural mailboxes on a 2-wide spreader with 4815E eagle newspaper holders and a modern decorative mailbox post. A different instruction sheet is available for installing 4855E eagle rural mailboxes on a 3-wide spreader with 4815E eagle newspaper holders and a modern decorative mailbox post. Other installation instructions are available for installing the mailboxes and spreaders with newspaper holders on a standard mailbox post, mounting a single mailbox on a decorative or standard mailbox post, mounting a single newspaper holder, and mounting the post in a concrete footing.

When you install a curbside or roadside mailbox, make sure that it is easily accessible to the mail carrier. By regulation it should be 41" to 45" from the ground or street surface up to the inside floor of the mailbox. The door should be set back 6" to 8" back from the front face of the curb or the road edge. However, you should check with your local postmaster to ensure that the mailbox is installed according to local regulations.

Spreader Installation to Modern Decorative Mailbox Post

All hardware to attach the spreader to the modern decorative post is included with the post. To attach the spreader to the modern decorative mailbox post, install four (4) 5/16"-18 X 2-3/4" long hex flange head bolts through the four (4) center square holes of the spreader, through the square spacer and through the four (4) square holes in the top plate of the modern decorative post arm. Install 5/16" flat washers and 5/16"-18 hex nuts on the ends of the four (4) bolts protruding below the bottom of the modern decorative post arm. Cover the hex flange head bolts and nuts with cap plugs.

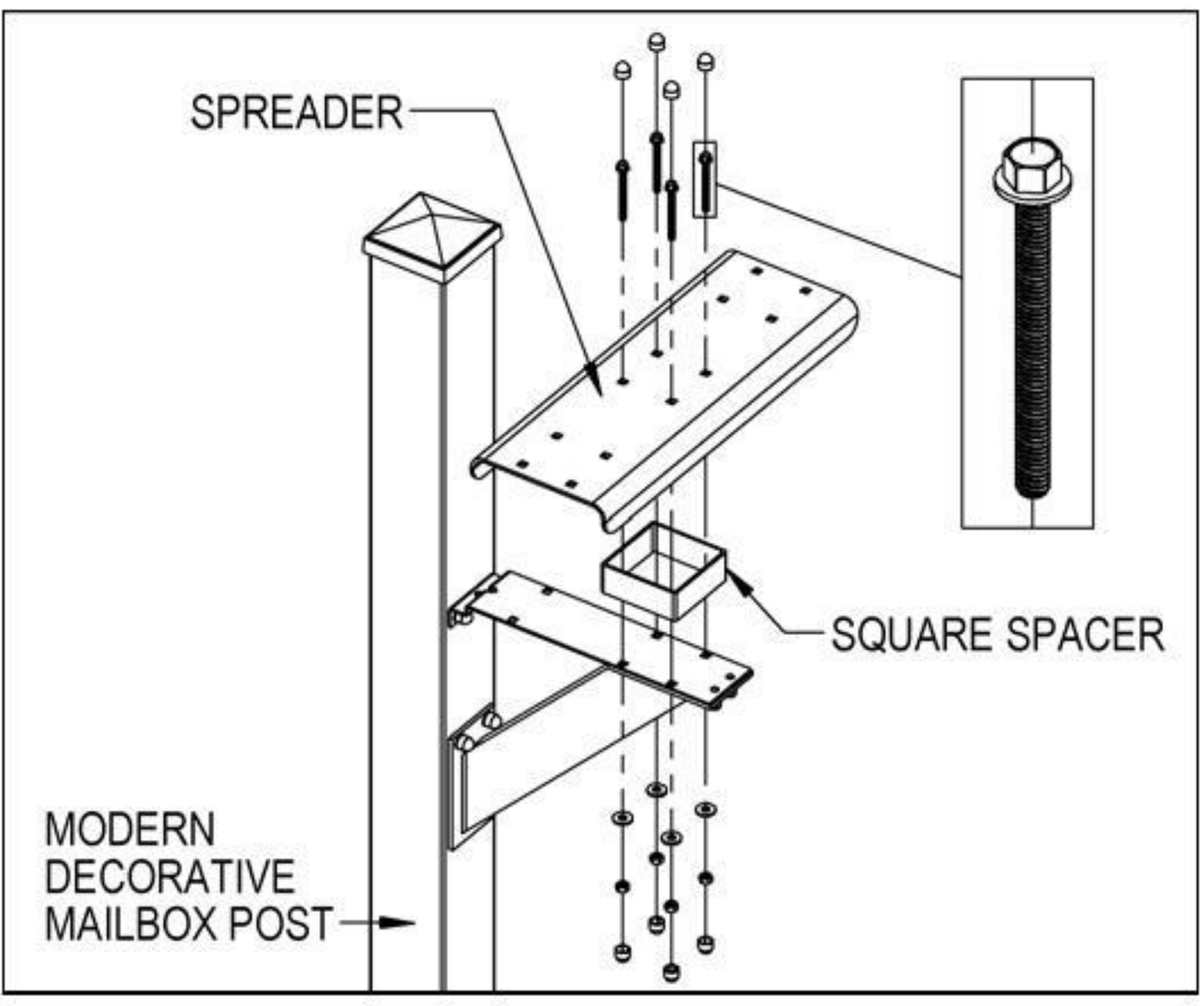

Newspaper Holders Installation to Spreader

All hardware to attach the newspaper holders to the spreader is included with the spreader. To attach a newspaper holder to the spreader, install four (4) 5/16"-18 x 1-3/4" long carriage bolts through the four (4) square holes shown in the inside floor of the newspaper holder and through the four (4) corresponding holes on the spreader. Install 5/16" flat washers and 5/16"-18 hex nuts on the ends of the four (4) bolts protruding below the bottom of the spreader. Repeat these steps for the other newspaper holder.

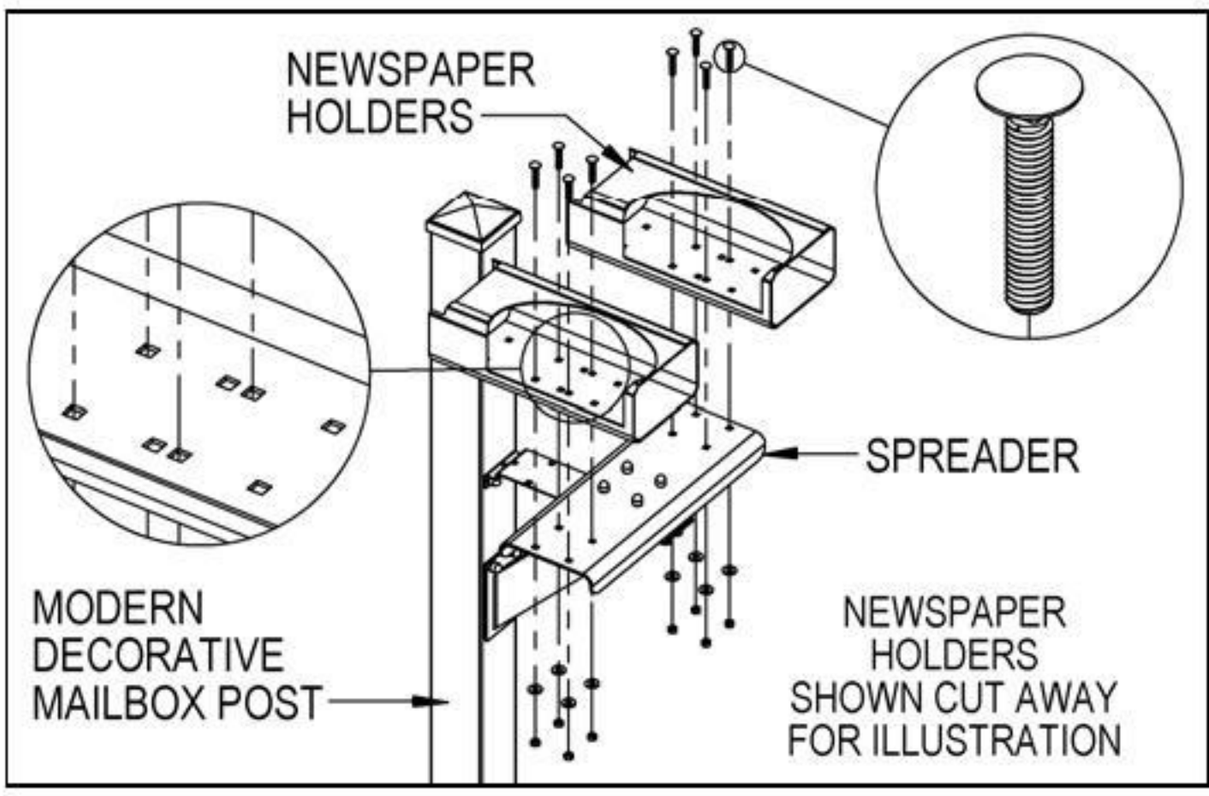

Mailbox Installation to Newspaper Holders

All hardware to attach the mailboxes to the newspaper holders is included with the newspaper holders. To attach a mailbox to a newspaper holder, install four (4) 5/16"-18 X 3/4" long carriage bolts into (4) square holes in the floor of the mailbox and through the four (4) square holes shown on the top of the newspaper holder. Install 5/16" flat washers and 5/16"-18 hex nuts on the ends of the four (4) bolts protruding below the top of the newspaper holder. Cover the hex nuts with cap plugs. Repeat these steps for the other mailbox. Installation is now complete. Additional hardware provided is not needed and may be discarded.

Eagle Rural Mailboxes – 4855E

3-Wide Spreader with Eagle Newspaper Holders on a Modern Decorative Mailbox Post Installation Instructions

U.S.P.S. APPROVED

Installing Mailboxes on Spreader with Newspaper Holders on a Modern Decorative Mailbox Post

Thank you for selecting Salsbury's 4855E eagle rural mailbox.

This instruction sheet is for installing 4855E eagle rural mailboxes on a 3-wide spreader with 4815E eagle newspaper holders and a modern decorative mailbox post. A different instruction sheet is available for installing 4855E eagle rural mailboxes on 2-wide spreaders with 4815E eagle newspaper holders and a modern decorative mailbox post. Other installation instructions are available for installing the mailboxes and spreaders with newspaper holders on a modern decorative post, mounting a single mailbox on a decorative or standard post, mounting a single newspaper holder, and mounting the post in a concrete footing.

When you install a curbside or roadside mailbox, make sure that it is easily accessible to the mail carrier. By regulation it should be 41" to 45" from the ground or street surface up to the inside floor of the mailbox. The door should be set back 6" to 8" back from the front face of the curb or the road edge. However, you should check with your local postmaster to ensure that the mailbox is installed according to local regulations.

Spreader and Newspaper Holders Installation to Modern Decorative Mailbox Post

All hardware to attach the spreader to the modern decorative mailbox post is included with the post. Attaching the spreader to the modern decorative mailbox post requires simultaneously attaching the center newspaper holder to the spreader and to the modern decorative mailbox post. Start by installing four (4) 5/16"-18 x 3" long carriage bolts through the four (4) square holes shown in the inside floor of the center newspaper holder, through the four (4) center square holes in top of the spreader, through the square spacer and through the four (4) square holes in the top plate of the modern decorative mailbox post arm. Install 5/16" flat washers and 5/16"-18 hex nuts on the ends of the four (4) bolts protruding below the bottom of the top plate on the modern decorative mailbox post arm.

All hardware to attach the remaining two newspaper holders to the spreader is included with the spreader. To attach an additional newspaper holder, install four (4) 5/16"-18 x 1-3/4" long carriage bolts through the four (4) square holes shown in the inside floor of the newspaper holder and through the corresponding square holes in top of the spreader. Install 5/16" flat washers and 5/16"-18 hex nuts on the ends of the four (4) bolts protruding below the bottom of the spreader. Repeat these steps for the remaining newspaper holder.

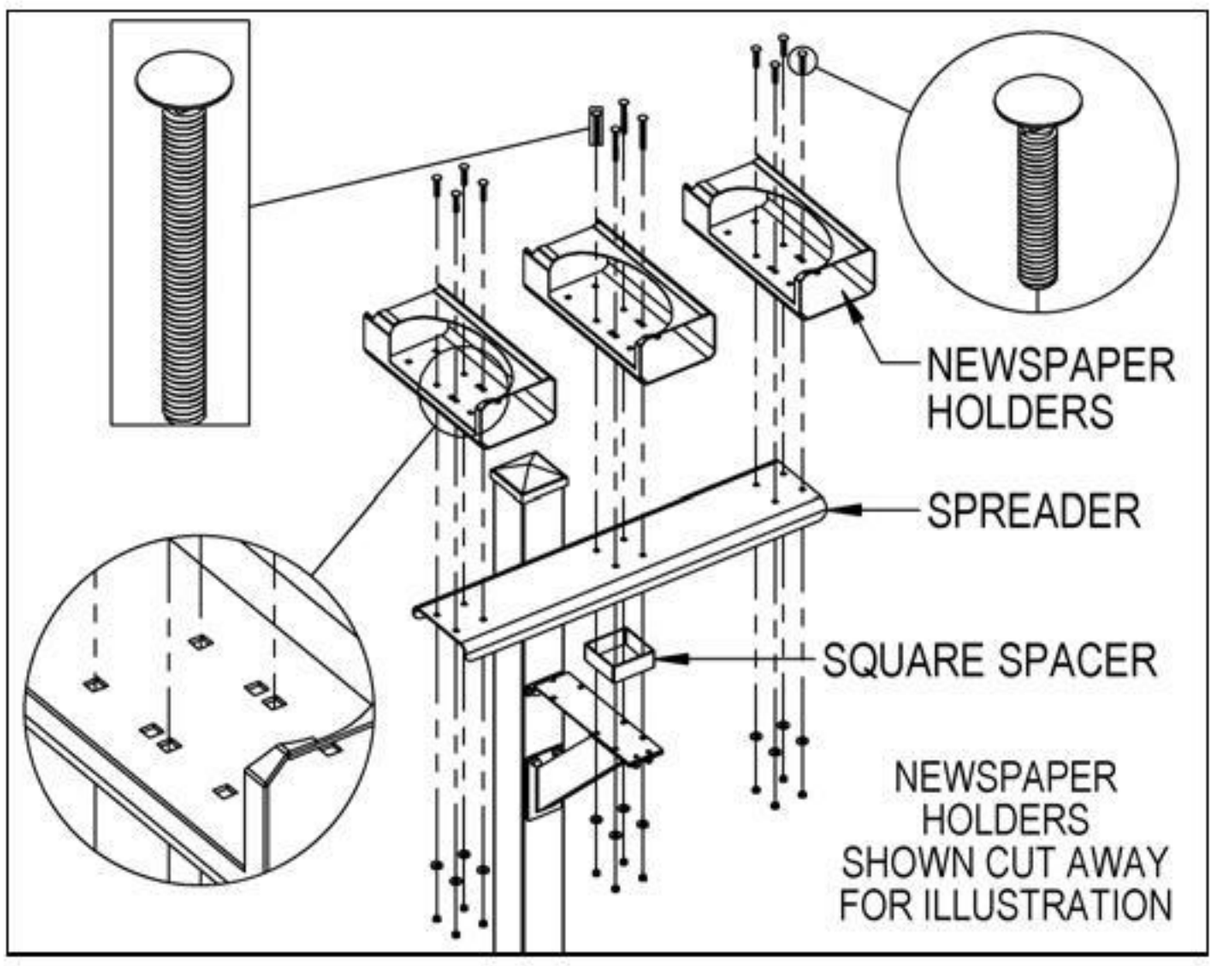

Mailbox Installation to Newspaper Holders

All hardware to attach the mailboxes to the newspaper holders is included with the newspaper holders. To attach a mailbox to a newspaper holder, install four (4) 5/16"-18 X 3/4" long carriage bolts into (4) square holes in the floor of the mailbox and through the four (4) square holes shown on the top of the newspaper holder. Install 5/16" flat washers and 5/16"-18 hex nuts on the ends of the four (4) bolts protruding below the top of the newspaper holder. Cover the hex nuts with cap plugs. Repeat these steps for the other mailboxes. Installation is now complete. Additional hardware provided is not needed and may be discarded.

