Designer Roadside Mailboxes – 4325D
Deluxe Mailbox Post Assembly Installation Instructions

Installing Arm(s) on Deluxe Mailbox Posts

Thank you for selecting Salsbury's deluxe mailbox post. This instruction sheet is for assembling the 1-sided or 2-sided deluxe mailbox post. All hardware to assemble the deluxe mailbox post is provided.

When you install a curbside or roadside mailbox, make sure that it is easily accessible to the mail carrier. By regulation a locked mailbox should be 41" to 45" from the ground or street surface up to the point of mail entry. The door should be set back 6" to 8" back from the front face of the curb or the road edge. However, you should check with your local postmaster to ensure that the mailbox is installed according to local regulations. It is important to note that it is not the responsibility of mail carriers to open mailboxes that are locked, accept keys for this purpose, or lock mailboxes after delivery of the mail.

4370 – 1 Sided

First check to see that all the parts and fasteners in the carton have been located and identified according to the illustration below. Also refer to the illustration below to position the parts correctly.

1. Attach the small right-angle bracket to the post with the long leg on top with two (2) 5/16"-18 x 2" long pan head bolts.

2. Attach the long square-tube arm to the small right angle bracket with two (2) 1/4"-20 x 1/2" long flat-head socket screws.

3. Attach the large decorative arch to the post and the long arm with four (4) 5/16"- 8 x 1" long hex flange head bolts. Cover with cap plugs.

4. Attach the other small right-angle bracket with the long leg on the bottom with two (2) 5/16"-18 x 2" long pan head bolts.

5. Attach the short square-tube arm to the small right-angle bracket with two (2) 1/4'-20 x 1/2" long flat-head socket screws. This completes the assembly.

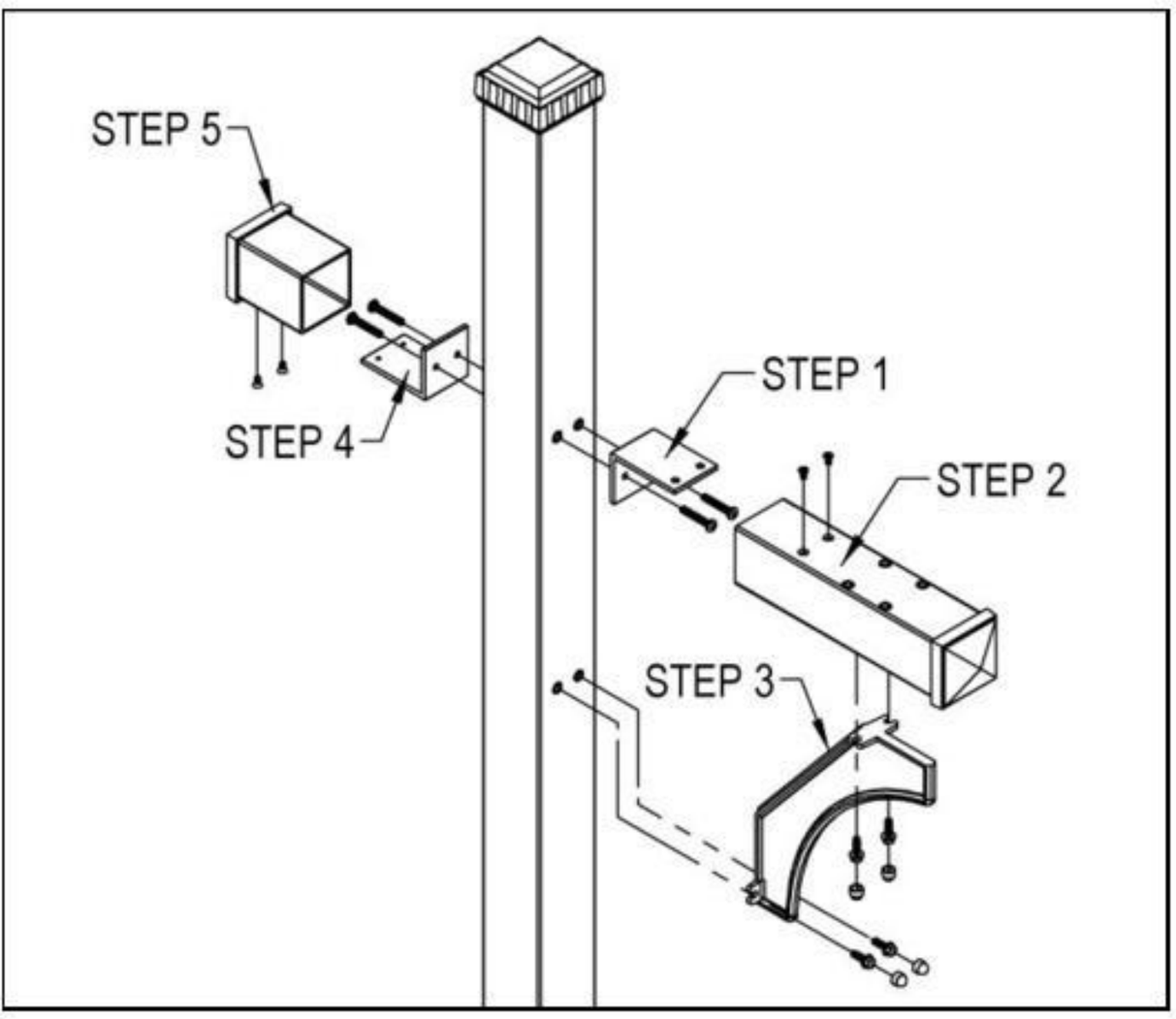

4370 Assembly

4372 – 2 Sided for 2 Mailboxes
4373 – 2 Sided for 3 Mailboxes
4374 – 2 Sided for 4 Mailboxes

First check to see that all the parts and fasteners in the carton have been located and identified according to the illustration below. Also refer to the illustration below to position the parts correctly. The 4373 has the same parts as the 4372, except one (1) arm is longer. The 4374 has the same parts as the 4372, except the two (2) arms are longer.

1. Attach the small right-angle bracket to the post with the long leg on top with two (2) 5/16"-18 x 2" long pan head bolts.

2. Attach the long square-tube arm to the small right angle bracket with two (2) 1/4"-20 x 1/2" long flat-head socket screws.

3. Attach the large decorative arch to the post and the long square-tube arm with four (4) 5/16"-18 x 1" long hex flange head bolts. Cover with cap plugs.

4. Repeat steps 1 through 3 above for the second arm on the other side of the post. This completes the assembly.

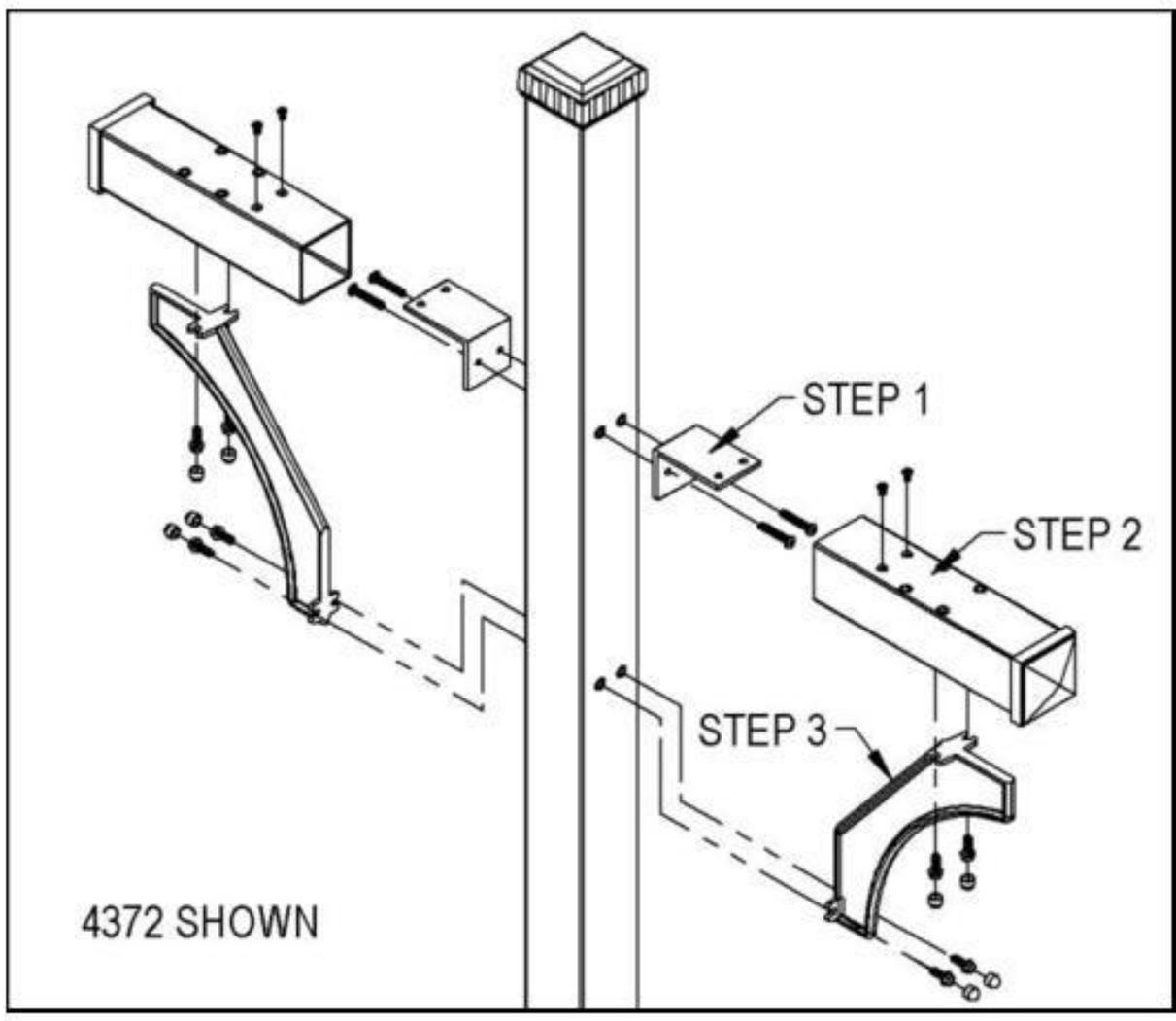

4372, 4373, 4374 Assembly

Designer Roadside Mailboxes – 4325D

In-Ground Mounted Pedestal or Post Installation Instructions

U.S.P.S. APPROVED

Installing the In-Ground Mounted Pedestal or Post

When you install a curbside or roadside mailbox, make sure that it is easily accessible to the mail carrier. By regulation a locked mailbox should be 41" to 45" from the ground or street surface up to the point of mail entry. The door should be set back 6" to 8" back from the front face of the curb or the road edge. However, you should check with your local postmaster to ensure that the mailbox is installed according to local regulations. It is important to note that it is not the responsibility of mail carriers to open mailboxes that are locked, accept keys for this purpose, or lock mailboxes after delivery of the mail.

To install the in-ground mounted mailbox pedestal or post, begin by digging a hole for the concrete footing and then prepare the concrete. The top surface of the footing should be about 12" by 18". See the illustration for the relative position of the rectangular footing to the pedestal or post and mailbox. The concrete should extend into the ground 24" or greater if your local frost line is deeper. Installing the concrete below the frost line will prevent movement during ground freezing and thawing. The bottom of the hole for the concrete footing should be filled with a depth of about 6" of gravel to promote drainage under the post. The top of the footing should be sloped for water runoff.

When digging the hole for the footing, be careful to not puncture water, sewer, or gas lines.

After digging the hole, set the pedestal or post in the hole and fill the hole with the prepared concrete mix. Prod the mix with a stick while filling to reduce any air pockets. If you want to conceal the concrete, pour it to within a few inches of the top of the hole and cover with soil after the concrete has set. Use a carpenter's level on the sides of the pedestal or post to ensure that it is aligned vertically. Periodically check the vertical alignment of the pedestal or post as the concrete is curing.

