Designer Roadside Mailboxes – 4325-D

Installation Instructions

U.S.P.S. APPROVED

Thank you for selecting Salsbury's 4325-D designer roadside mailbox. We are confident that the quality and construction of this product will provide years of maintenance free use.

Model 4325-D Designer Roadside Mailbox

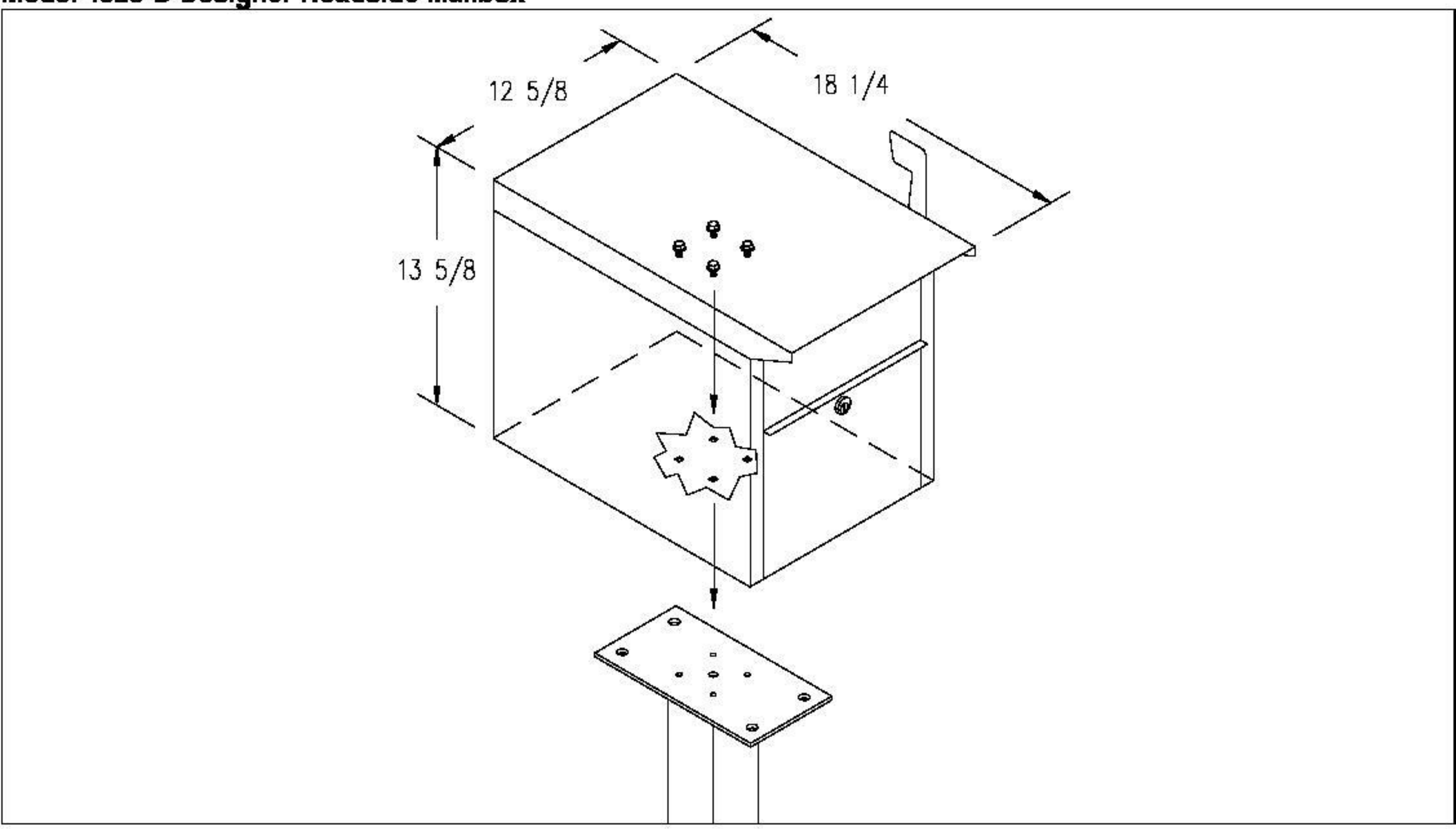

Installing Roadside Mailbox Directly to a Pedestal

This instruction sheet is for installing the 4325-D designer roadside mailbox directly to a bolt-mounted or in-ground mounted pedestal (ordered separately). Other installation instructions are available for installing the mailbox on a 2-wide spreader, a 3-wide spreader, in a wall or column, on a deluxe post, or on a post in a concrete footing.

The mounting plate on the top of the pedestal has four tapped holes. There are four 5/16" x 1/2" long hex washer head bolts provided with the pedestal to fasten the mailbox to the top of the pedestal.

Set the mailbox on the pedestal top plate and open the lower door. Install the hex washer head bolts through the mailbox holes into the four holes in the pedestal top plate. Check that the bolts are sufficiently tightened.

USPS Regulations

It is important to note that it is not the responsibility of mail carriers to open mailboxes that are locked, accept keys for this purpose, or lock mailboxes after delivery of the mail.

When you install a mailbox on a curbside or roadside, make sure that it is easily accessible to the mail carrier. Customers are required to contact the local post office before installing the mailbox to ensure its correct placement and height at the street. Generally, mailboxes are installed at a height of 41-45 inches from the road surface to the inside floor of the point of mail entry and are set back 6-8 inches from the front face of curb or road edge to the mailbox door.

Designer Roadside Mailboxes – 4325-D

Wall or Column Mounted Installation Instructions

U.S.P.S. APPROVED

Thank you for selecting Salsbury's 4325-D designer roadside mailbox. We are confident that the quality and construction of this product will provide years of maintenance free use.

Model 4325-D Designer Roadside Mailbox

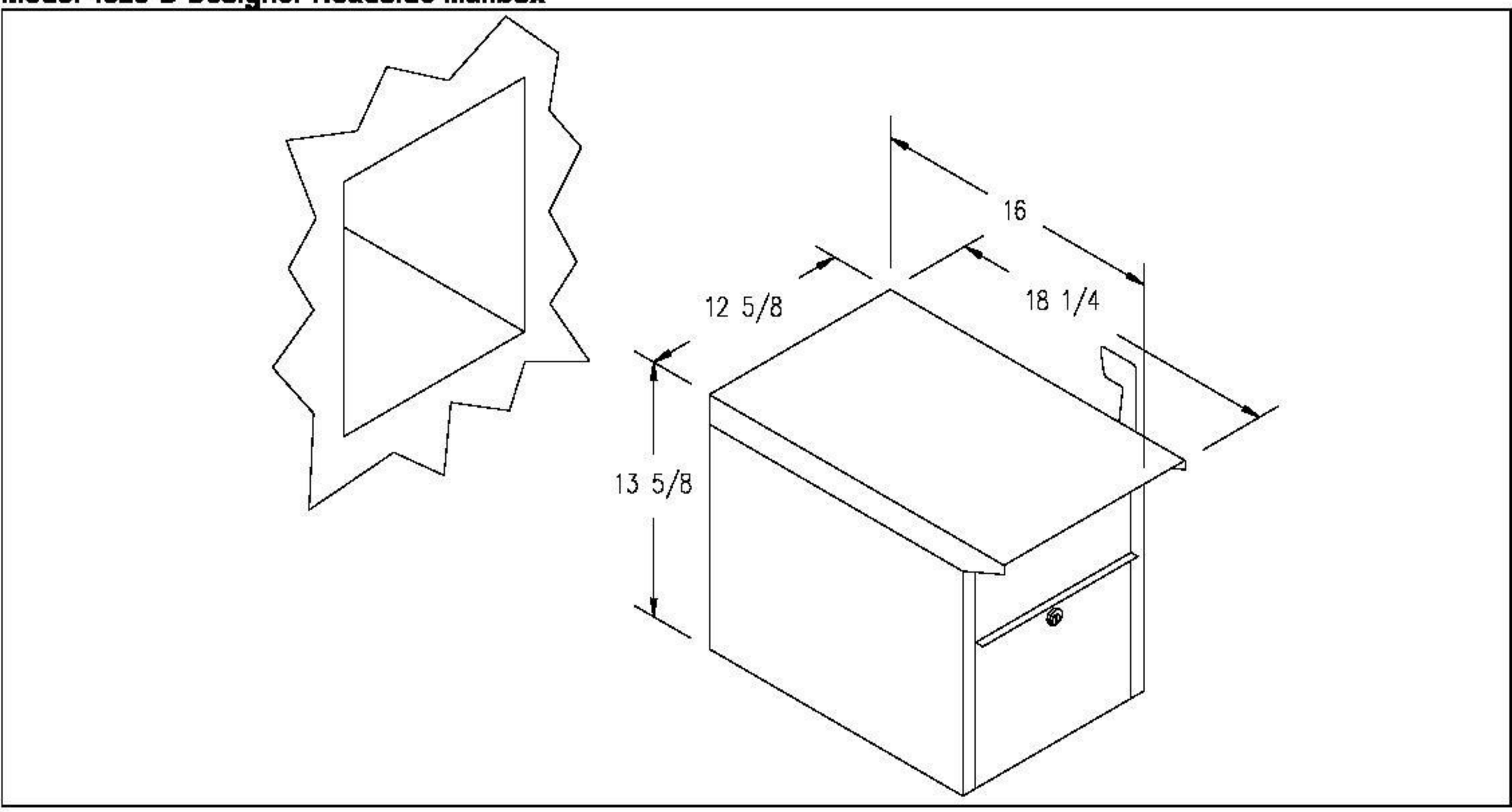

Installing Roadside Mailbox in a Wall or Column

This instruction sheet is for installing the 4325-D designer roadside mailbox in a hole in a wall or column. Other installation instructions are available for installing the mailbox direct to a pedestal, on a 2-wide spreader, on a 3-wide spreader, on a deluxe post, or on a post in a concrete footer.

It is recommended to have the unit present before starting the wall or column construction to obtain the best possible installation. The rough opening should be sized approximately 1/2" larger that the outside dimensions of the unit.

Due to construction variations and method of fastening the unit in the installation, the fastening hardware is not included. Choose fasteners that are appropriate for the construction method.

USPS Regulations

It is important to note that it is not the responsibility of mail carriers to open mailboxes that are locked, accept keys for this purpose, or lock mailboxes after delivery of the mail.

When you install a mailbox on a curbside or roadside, make sure that it is easily accessible to the mail carrier. Customers are required to contact the local post office before installing the mailbox to ensure its correct placement and height at the street. Generally, mailboxes are installed at a height of 41-45 inches from the road surface to the inside floor of the point of mail entry and are set back 6-8 inches from the front face of curb or road edge to the mailbox door.

Designer Roadside Mailboxes – 4325-D

Newspaper Holder Installation Instructions

U.S.P.S. APPROVED

Installing Newspaper Holder under Mailbox

Thank you for selecting Salsbury's 4325-D designer roadside mailbox. We are confident that the quality and construction of the mailbox will prove to be a good investment.

This instruction sheet is for installing the 4325-D designer roadside mailbox along with a 4315-D newspaper holder. Other installation instructions are available for installing the mailbox on a standard post, installing the mailbox on a deluxe post, installing the mailbox on spreaders, or installing the post in a concrete footing.

When you install a curbside or roadside mailbox, make sure that it is easily accessible to the mail carrier. By regulation it should be 41" to 45" from the ground or street surface up to the point of mail entry. The door should be set back 6" to 8" from the front face of the curb or the road edge. However, you should check with your local postmaster to ensure that the mailbox is installed according to local regulations.

The mailbox is fastened to the newspaper holder with four (4) 5/16" carriage bolts, washers, and nuts. The assembled mailbox and newspaper holder is then fastened to the standard or deluxe post with the four (4) 5/16" hex washer head bolts included with the post.

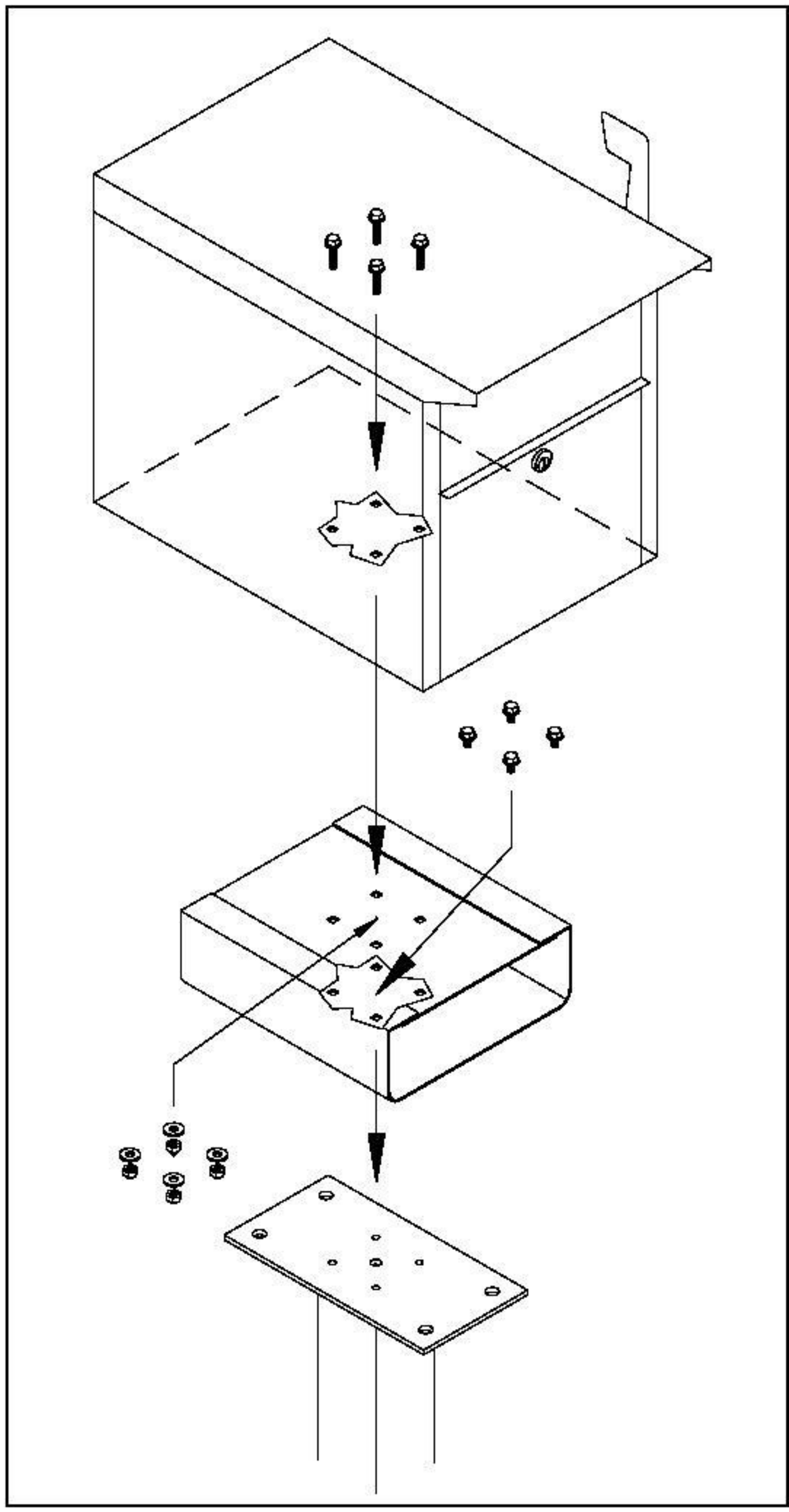

Designer Roadside Mailboxes – 4325-D

2-Wide Spreader Installation Instructions

U.S.P.S. APPROVED

Thank you for selecting Salsbury's 4325-D designer roadside mailbox. We are confident that the quality and construction of this product will provide years of maintenance free use.

Installing Roadside Mailbox on a 2-Wide Spreader

This instruction sheet is for installing two (2) 4325-D designer roadside mailboxes on a 2-wide spreader on a bolt-mounted or in-ground mounted standard pedestal (ordered separately). Other installation instructions are available for installing the mailboxes on a 3-wide spreader, directly to a pedestal, or in a wall or column, on a deluxe post, or on a post in a concrete footing.

The mounting plate on the top of the pedestal has four tapped holes. There are four 5/16" x 1/2" long hex washer head bolts provided with the pedestal to fasten the spreader to the top of the pedestal. The four black plastic caps may be used to cover the exposed heads of the bolts.

The roadside mailboxes are each mounted to the spreader using four 5/16" x 1-1/2" long carriage bolts, one 1" thick aluminum spacer, flat washers, and hex acorn nuts. Two of these kits are provided with the spreader, one for each of the mailboxes.

Set a roadside mailbox in one of the positions on the spreader and open the lower door. Install the carriage bolts through the mailbox holes, through the spacers, and through the four holes in the spreader. After assuring that the square shanks under the bolt heads are securely in the square holes in the bottom of the mailbox, attach the flat washers and hex acorn nuts to the bottom of the bolts. Make sure the nuts are sufficiently tightened.

Repeat for the second 4325-D designer roadside mailbox.

USPS Regulations

It is important to note that it is not the responsibility of mail carriers to open mailboxes that are locked, accept keys for this purpose, or lock mailboxes after delivery of the mail.

When you install a mailbox on a curbside or roadside, make sure that it is easily accessible to the mail carrier. Customers are required to contact the local post office before installing the mailbox to ensure its correct placement and height at the street. Generally, mailboxes are installed at a height of 41-45 inches from the road surface to the inside floor of the point of mail entry and are set back 6-8 inches from the front face of curb or road edge to the mailbox door.

Model 4325-D Designer Roadside Mailboxes

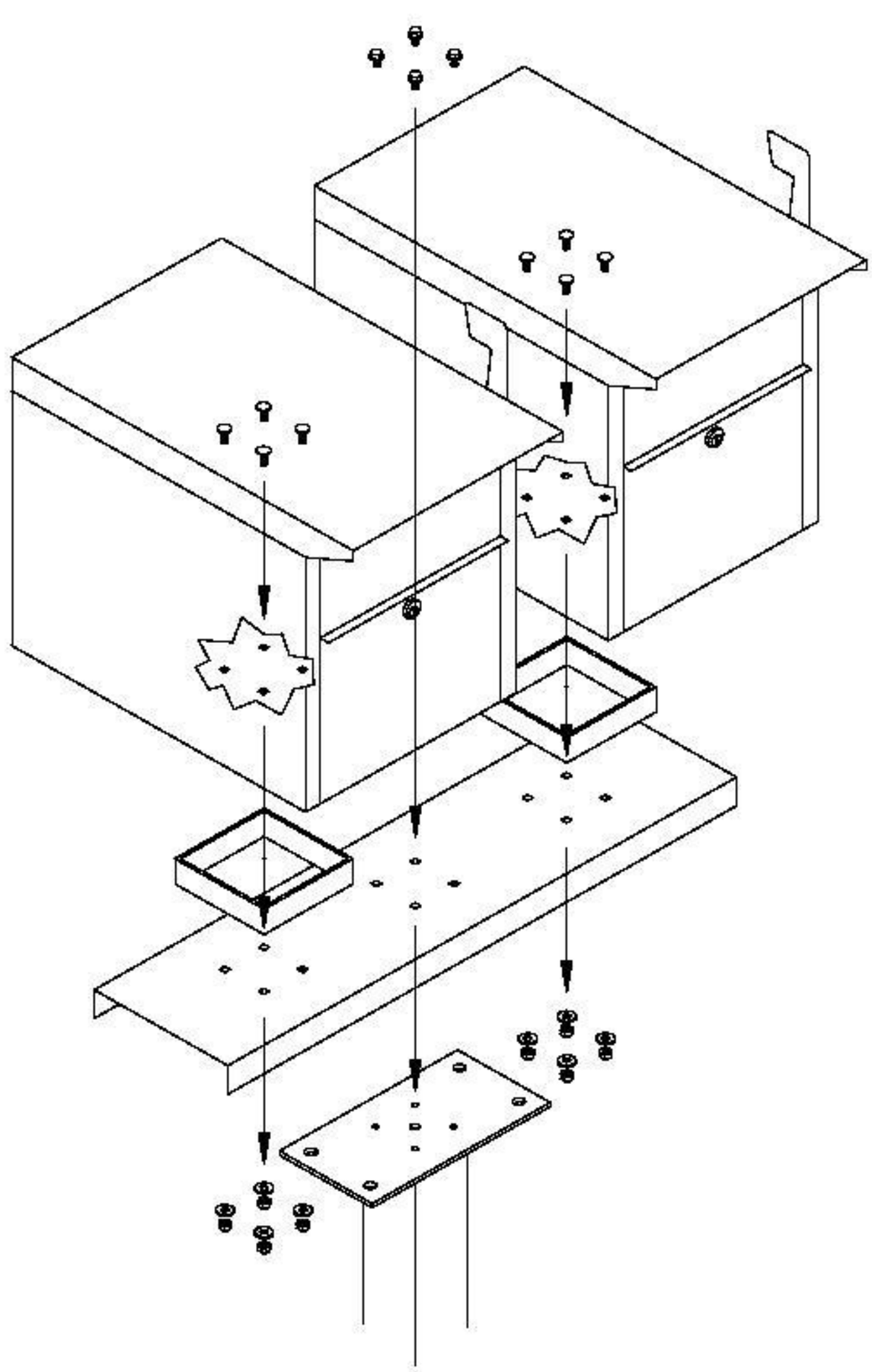

Designer Roadside Mailboxes – 4325-D

3-Wide Spreader Installation Instructions

U.S.P.S. APPROVED

Thank you for selecting Salsbury's 4325-D designer roadside mailbox. We are confident that the quality and construction of this product will provide years of maintenance free use.

Installing Roadside Mailboxes on a 3-Wide Spreader

This instruction sheet is for installing three 4325-D designer roadside mailboxes on a 3-wide spreader on a bolt-mounted or in-ground pedestal (ordered separately). Other installation instructions are available for installing the mailboxes on a 2-wide spreader, directly to a pedestal, in a wall or column, on a deluxe post, or on a post in a concrete footing.

The mounting plate on the top of the pedestal has four tapped holes. There are four 5/16" x 1-1/2" long hex washer head bolts and one 1" thick aluminum spacer provided to fasten the middle mailbox and the spreader to the top of the pedestal. Open the lower door of the mailbox and install the four bolts. Make sure the bolts are sufficiently tightened.

The other two mailboxes are each mounted to the spreader using four 5/16" x 1-1/2" long carriage bolts, one 1" thick aluminum spacer, flat washers, and hex acorn nuts. Two of these kits are provided with the spreader, one for each of the mailboxes.

Set a mailbox in one of the end positions on the spreader and open the lower door. Install the carriage bolts through the mailbox holes, through the spacer, and through the four holes in the spreader. After assuring that the square shanks under the bolt heads are securely in the square holes in the bottom of the mailbox, attach the flat washers and hex acorn nuts to the bottom of the bolts. Make sure the nuts are sufficiently tightened.

Repeat for the remaining mailbox.

USPS Regulations

It is important to note that it is not the responsibility of mail carriers to open mailboxes that are locked, accept keys for this purpose, or lock mailboxes after delivery of the mail.

When you install a mailbox on a curbside or roadside, make sure that it is easily accessible to the mail carrier. Customers are required to contact the local post office before installing the mailbox to ensure its correct placement and height at the street. Generally, mailboxes are installed at a height of 41-45 inches from the road surface to the inside floor of the point of mail entry and are set back 6-8 inches from the front face of curb or road edge to the mailbox door.

Model 4325-D Designer Roadside Mailboxes

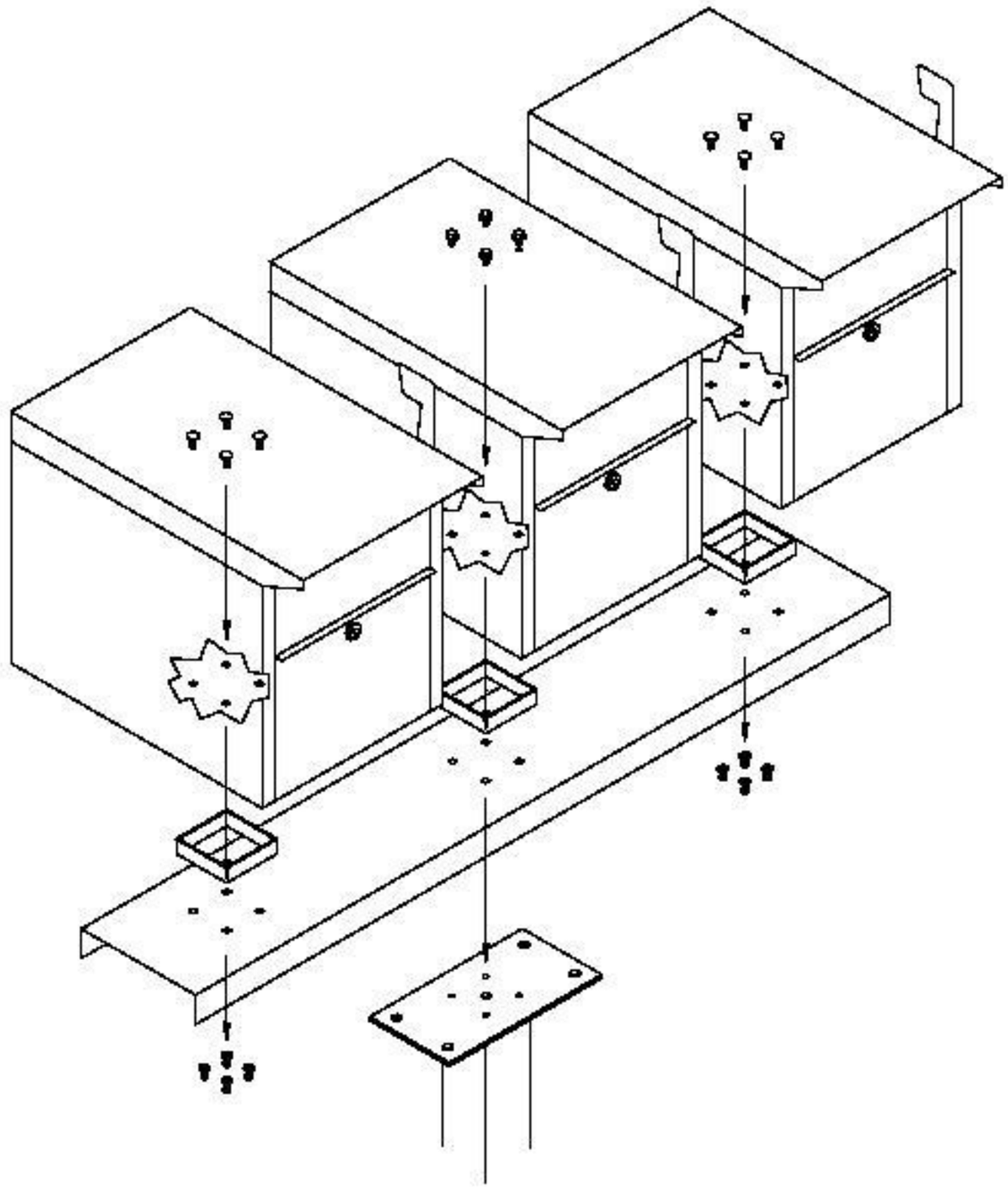

Designer Roadside Mailboxes – 4325-D

Deluxe Arm Post Installation Instructions

U.S.P.S. APPROVED

Installing Arm(s) on Deluxe Mailbox Posts

Thank you for selecting Salsbury's deluxe mailbox post. We are confident that the quality and construction of the post will prove to be a good investment. This instruction sheet is for assembling the 1-sided or 2-sided deluxe mailbox post. Other instructions are available for installing the 4325-D designer mailbox direct to a standard pedestal on a 2-wide or 3-wide spreader or a post in a concrete footing.

When you install a curbside or roadside mailbox, make sure that it is easily accessible to the mail carrier. By regulation it should be 41" to 45" from the ground or street surface up to the inside floor of the mailbox. The door should be set 6" to 8" back from the front face of the curb or the road edge. However, check with your postmaster to ensure that the mailbox is installed according to local regulations.

4370 – 1 Sided

First check to see that all the parts and fasteners in the carton have been located and identified according to the illustration below. Also refer to the illustration below to position the parts correctly.

1. Attach the small right-angle bracket to the post with the long leg on top with two (2) 5/16" x 1" long hex washer-head bolts.

2. Attach the long square-tube arm to the small right angle bracket with two (2) 1/4"-20 x 1/2" long flat-head socket screws.

3. Attach the large decorative arch to the post and the long arm with four (4) 5/16" x 1" long hex washer-head bolts.

4. Attach the other small right-angle bracket with the long leg on the bottom with two (2) 5/16" x 1" long hex washer-head bolts.

5. Attach the short square-tube arm to the small right-angle bracket with two (2) 1/4'-20 x 1/2" long flat-head socket screws. This completes the assembly.

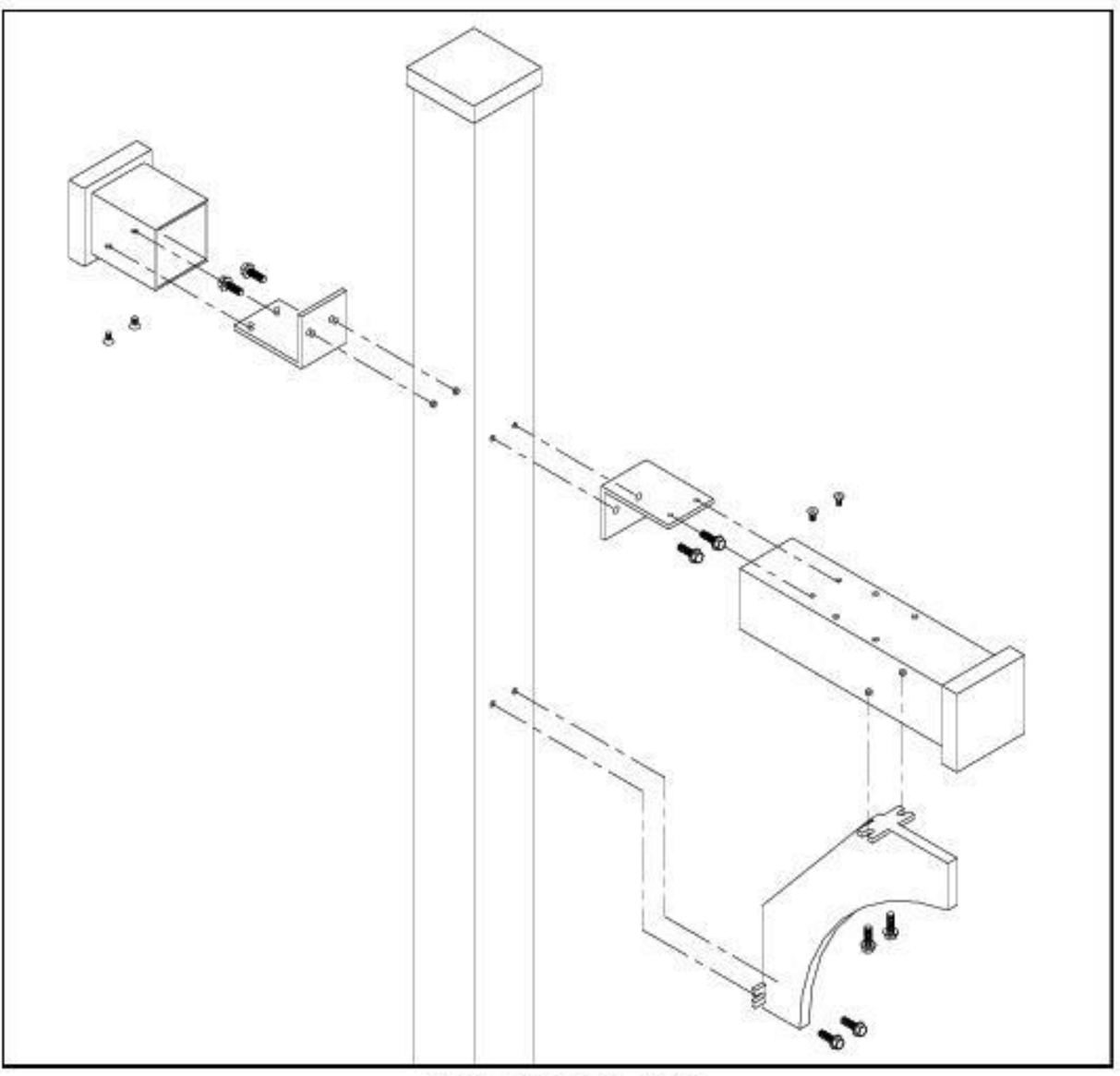

4370 Assembly

4372 – 2 Sided

First check to see that all the parts and fasteners in the carton have been located and identified according to the illustration below. Also refer to the illustration below to position the parts correctly.

1. Attach the small right-angle bracket to the post with the long leg on top with two (2) 5/16" x 1" long hex washer-head bolts.

2. Attach the long square-tube arm to the small right angle bracket with two (2) 1/4"-20 x 1/2" long flat-head socket screws.

3. Attach the large decorative arch to the post and the long square-tube arm with four (4) 5/16" x 1" long hex washer-head bolts.

4. Repeat steps 1 through 3 above for the second arm on the other side of the post. This completes the assembly.

General Note: Use the four (4) hex-head bolts provided to install the mailbox to the deluxe post. The nylon spacers install between the bottom of the 4325 mailbox and the top of the deluxe post arm.

4372 Assembly

Designer Roadside Mailboxes – 4325-D

In-Ground Mounted Post Installation Instructions

U.S.P.S. APPROVED

Installing the In-Ground Mounted Post for the Mailbox Into Concrete

When you install a curbside or roadside mailbox, make sure that it is easily accessible to the mail carrier. By regulation it should be 41" to 45" from the ground or street surface up to the inside floor of the mailbox. The door should be set back 6" to 8" back from the front face of the curb or the road edge. However, you should check with your local postmaster to ensure that the mailbox is installed according to local regulations.

Dig the hole for the concrete footing, and prepare the concrete. You will need approximately 4-1/2 cubic feet. The top surface of the footing should be about 12" by 18" and extend 36" into the ground. See the illustration for the relative position of the rectangular footing to the post and mailbox. The bottom of the hole for the concrete footing should be filled with about 6" of gravel to promote drainage under the post. The top of the footing should be sloped for water runoff.

The concrete must be below the frost line. Otherwise the post will move when the ground freezes. Be careful not to puncture water, sewer, or gas lines when digging holes for footing.

Set the post in the hole and fill the hole with the prepared concrete mix. Prod the mix with a stick while filling to reduce any air pockets. If you want to conceal the concrete, pour it to within a few inches of the top of the hole and cover with soil after the concrete has set. Use a carpenter's level on the sides of the post to ensure that the post is aligned vertically. Periodically check the vertical alignment of the post as the concrete is curing.

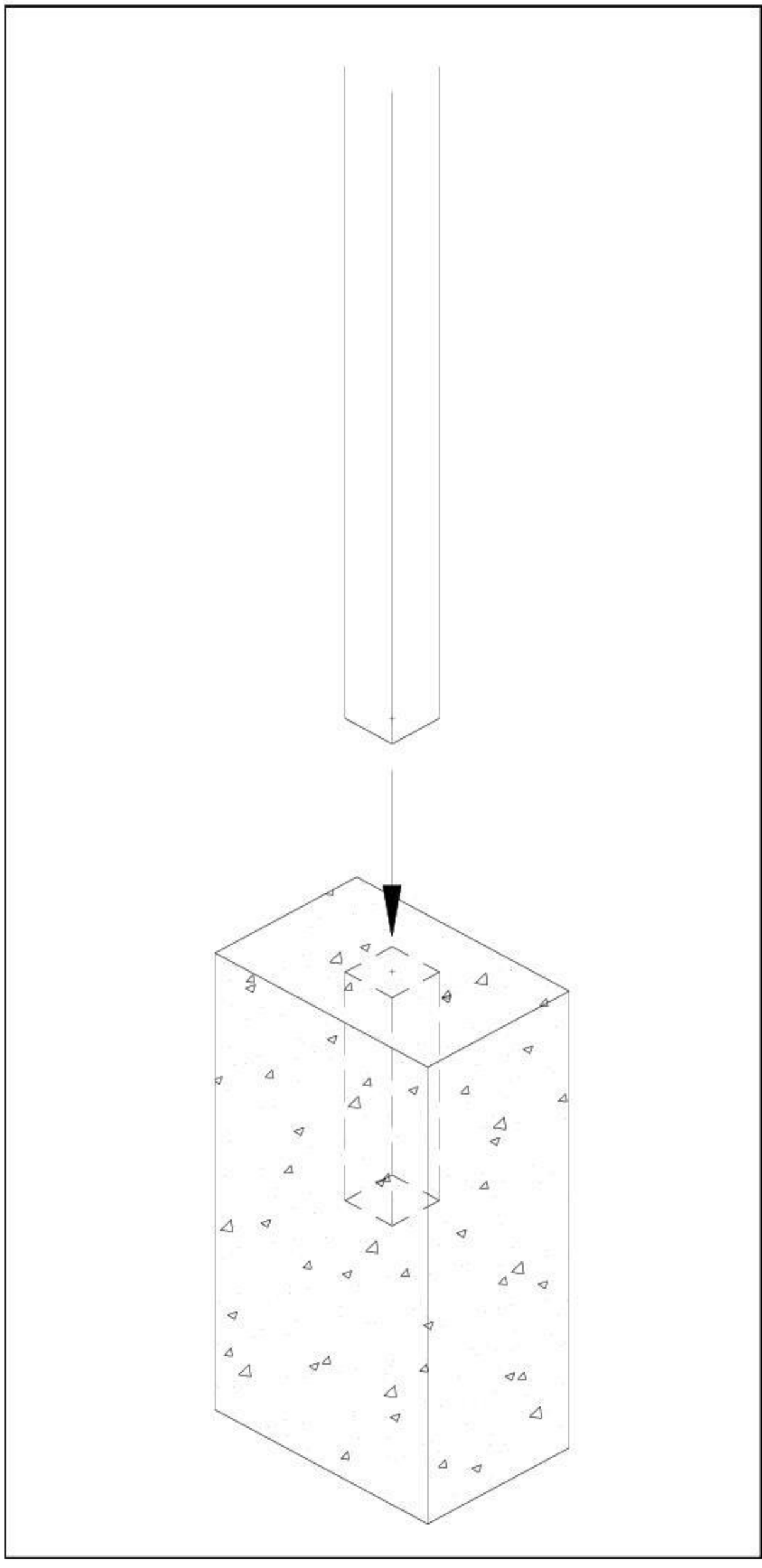

Designer Roadside Mailboxes – 4325-D

Bolt Mounted Post Installation Instructions

U.S.P.S. APPROVED

Installing the Bolt Mounted Post for the Mailbox onto Anchor Bolts

When you install a curbside or roadside mailbox, make sure that it is easily accessible to the mail carrier. By regulation it should be 41" to 45" from the ground or street surface up to the inside floor of the mailbox. The door should be set back 6" to 8" back from the front face of the curb or the road edge. However, you should check with your local postmaster to ensure that the mailbox is installed according to local regulations.

Dig the hole for the concrete footing, and prepare the concrete. You will need approximately 4-1/2 cubic feet. The top surface of the footing should be about 12" by 18" and extend 36" into the ground. See the illustration for the relative position of the rectangular footing to the post and mailbox. The bottom of the hole for the concrete footing should be filled with about 6" of gravel to promote drainage under the post. The top of the footing should be sloped for water runoff.

The concrete must be below the frost line. Otherwise the post will move when the ground freezes. Be careful not to puncture water, sewer, or gas lines when digging holes for footing.

Four (4) 1/2"-13 by 8" long J-shaped anchor bolts and eight (8) 1/2"-13 nuts are provided. Attach the anchor bolts to the base of the post with four (4) nuts under and four (4) nuts over the bottom mounting plate. Pour the concrete into the hole, prodding the mix with a stick while filling to reduce any air pockets. Press the anchor bolts on the bottom of the post into the concrete until the bottom plate is resting on the top surface of the wet concrete. Use a carpenter's level on the sides of the post to ensure that the post is aligned vertically. Periodically check the vertical alignment of the post as the concrete is curing.

The concrete will shrink as it hardens, leaving a space between the anchor and the concrete when it is cured. To prevent this, loosen the top bolt one full turn prior to inserting into the wet concrete. After the anchor is inserted into the wet concrete, place your foot on the top of the threaded anchor and push down until the top nut is pressed against the anchor plate. After the concrete has hardened, re-tighten the top bolt.

