Deluxe Mailbox Posts – 4870, 4872, 4873 and 4874
Post Assembly Installation Instructions

Installing Arm(s) on Deluxe Mailbox Posts

Thank you for selecting Salsbury's deluxe mailbox post. This instruction sheet is for assembling the 1-sided or 2-sided deluxe mailbox post. All hardware to assemble the deluxe mailbox post is provided.

When you install a curbside or roadside mailbox, make sure that it is easily accessible to the mail carrier. By regulation it should be 41" to 45" from the ground or street surface up to the inside floor of the mailbox. The door should be set back 6" to 8" back from the front face of the curb or the road edge. However, you should check with your local postmaster to ensure that the mailbox is installed according to local regulations.

4870 – 1 Sided

First check to see that all the parts and fasteners in the carton have been located and identified according to the illustration below. Also refer to the illustration below to position the parts correctly.

1. Attach the small right-angle bracket to the post with the long leg on top with two (2) 5/16"-18 x 2" long pan head bolts.

2. Attach the long square-tube arm to the small right angle bracket with two (2) 1/4"-20 x 1/2" long flat-head socket screws.

3. Attach the large decorative arch to the post and the long arm with four (4) 5/16"- 8 x 1" long hex flange head bolts. Cover with cap plugs.

4. Attach the other small right-angle bracket with the long leg on the bottom with two (2) 5/16"-18 x 2" long pan head bolts.

5. Attach the short square-tube arm to the small right-angle bracket with two (2) 1/4'-20 x 1/2" long flat-head socket screws. This completes the assembly.

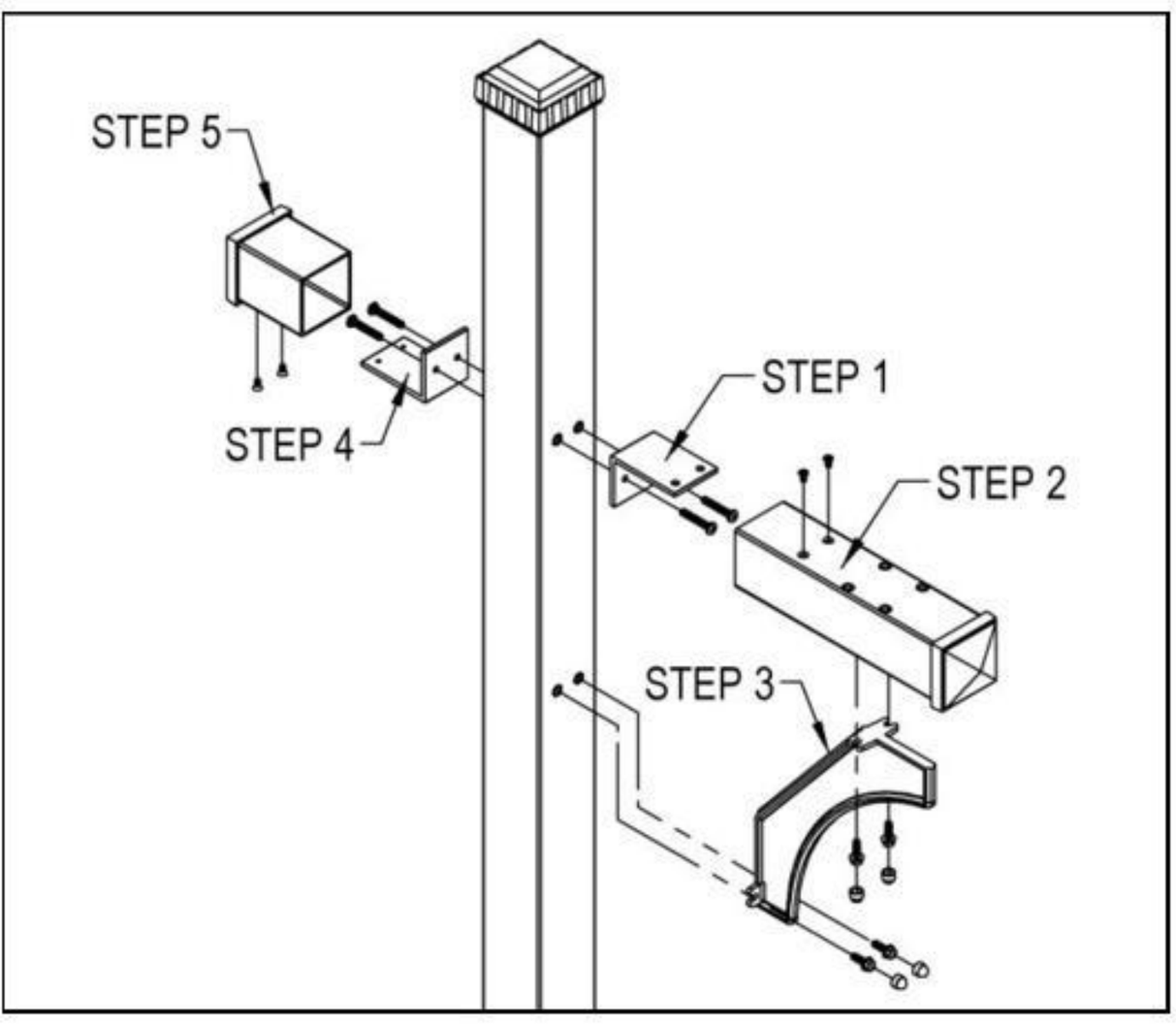

4870 Assembly

4872 – 2 Sided for 2 Mailboxes
4873 – 2 Sided for 3 Mailboxes
4874 – 2 Sided for 4 Mailboxes

First check to see that all the parts and fasteners in the carton have been located and identified according to the illustration below. Also refer to the illustration below to position the parts correctly. The 4873 has the same parts as the 4872, except one (1) arm is longer. The 4874 has the same parts as the 4872, except the two (2) arms are longer.

1. Attach the small right-angle bracket to the post with the long leg on top with two (2) 5/16"-18 x 2" long pan head bolts.

2. Attach the long square-tube arm to the small right angle bracket with two (2) 1/4"-20 x 1/2" long flat-head socket screws.

3. Attach the large decorative arch to the post and the long square-tube arm with four (4) 5/16"-18 x 1" long hex flange head bolts. Cover with cap plugs.

4. Repeat steps 1 through 3 above for the second arm on the other side of the post. This completes the assembly.

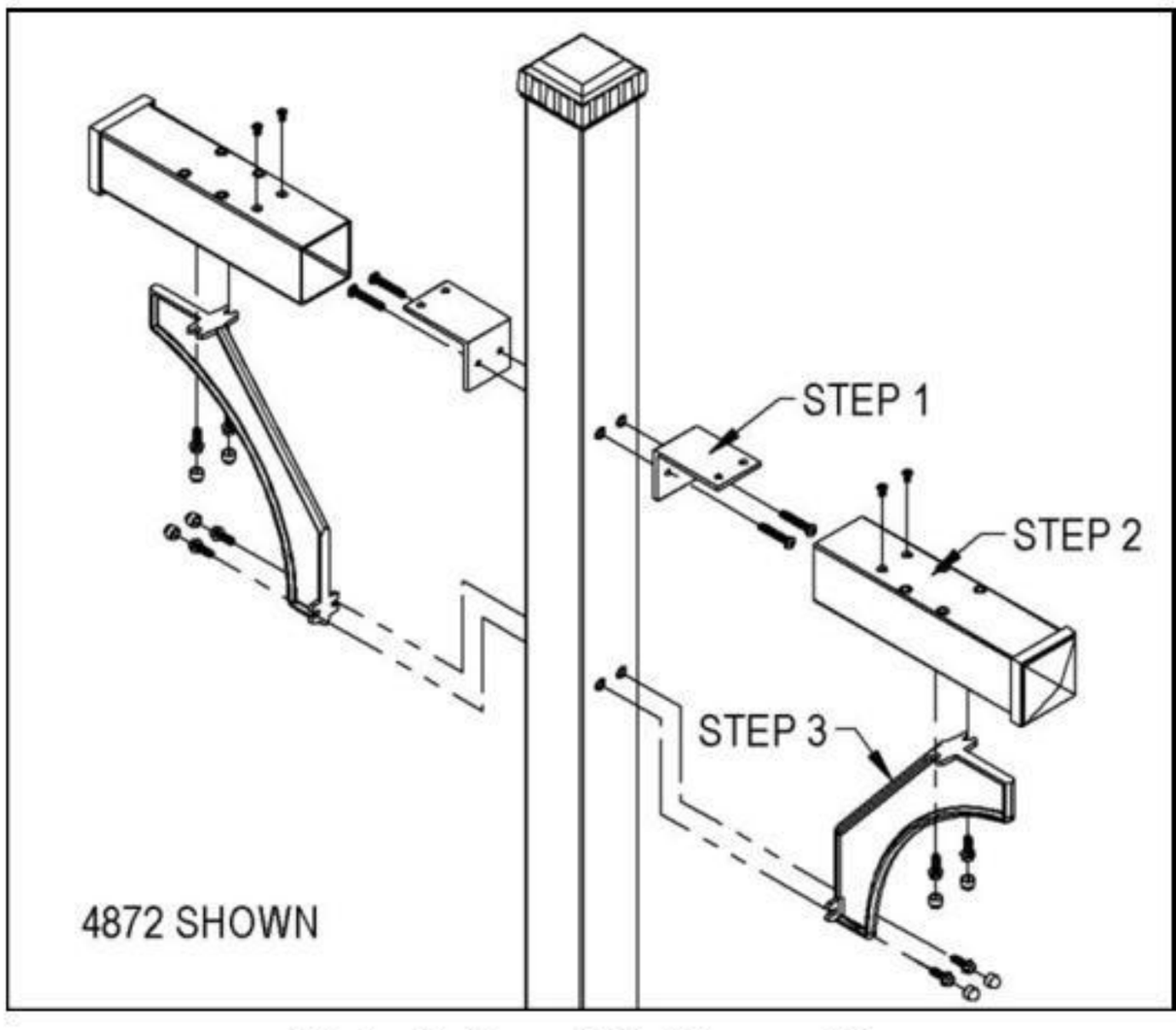

4872, 4873 and 4874 Assembly

Deluxe Bridge Style Mailbox Post – 4875
Post Assembly Installation Instructions

Thank you for selecting Salsbury's deluxe bridge style mailbox post. This instruction sheet is for assembling the deluxe bridge style mailbox post. All hardware to assemble the deluxe bridge style mailbox post is provided.

When you install a curbside or roadside mailbox, make sure that it is easily accessible to the mail carrier. By regulation it should be 41" to 45" from the ground or street surface up to the inside floor of the mailbox. The door should be set back 6" to 8" back from the front face of the curb or the road edge. However, you should check with your local postmaster to ensure that the mailbox is installed according to local regulations.

First check to see that all the parts and fasteners in the carton have been located and identified according to the illustration below. Also refer to the illustration below to position the parts correctly.

1. Attach a right-angle bracket to a post with the long leg on top with two (2) 5/16"-18 x 2" long pan head bolts.

2. Attach a short square-tube arm to the right angle bracket with two (2) 1/4"-20 x 1/2" long flat-head socket screws.

3. Attach a decorative arch to the post and the short square-tube arm with four (4) 5/16"-18 x 1" long hex flange head bolts. Cover with cap plugs.

4. Attach another right-angle bracket to the other side of the post with the long leg on top with two (2) 5/16"-18 x 2" long pan head bolts.

5. Attach the long square-tube arm to the right angle bracket with two (2) 1/4"-20 x 1/2" long flat-head socket screws.

6. Attach another decorative arch to the post and the long square-tube arm with four (4) 5/16"-18 x 1" long hex flange head bolts. Cover with cap plugs.

7. Repeat steps 1 through 6 above for the other the post. This completes the assembly.

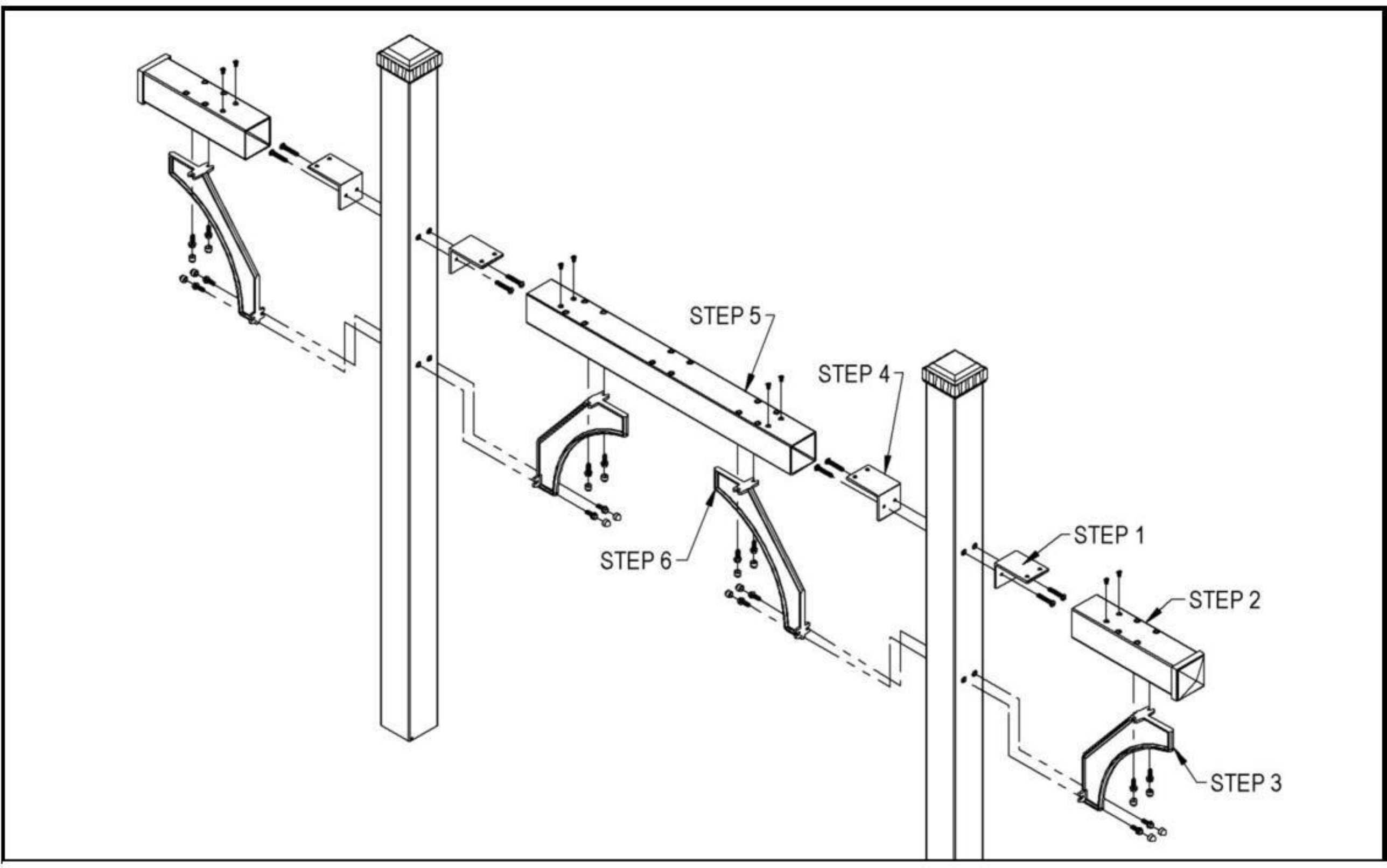

Deluxe Mailbox Posts – 4870, 4872, 4873, 4874 and 4875
In-Ground Mounted Mailbox Post Installation Instructions

U.S.P.S. APPROVED

Installing the In-Ground Mounted Mailbox Post

When you install a curbside or rural mailbox, make sure that it is easily accessible to the mail carrier. By regulation it should be 41" to 45" from the ground or street surface up to the inside floor of the mailbox. The door should be set back 6" to 8" back from the front face of the curb or the road edge. However, you should check with your local postmaster to ensure that the mailbox is installed according to local regulations.

To install the in-ground mounted mailbox post, begin by digging a hole for the concrete footing and then prepare the concrete. The top surface of the footing should be about 12" by 18". See the illustration for the relative position of the rectangular footing to the post and mailbox. The concrete should extend into the ground 24" or greater if your local frost line is deeper. Installing the concrete below the frost line will prevent movement during ground freezing and thawing. The bottom of the hole for the concrete footing should be filled with a depth of about 6" of gravel to promote drainage under the post. The top of the footing should be sloped for water runoff.

When digging the hole for the footing, be careful to not puncture water, sewer, or gas lines.

After digging the hole, set the post in the hole and fill the hole with the prepared concrete mix. Prod the mix with a stick while filling to reduce any air pockets. If you want to conceal the concrete, pour it to within a few inches of the top of the hole and cover with soil after the concrete has set. Use a carpenter's level on the sides of the post to ensure that the post is aligned vertically. Periodically check the vertical alignment of the post as the concrete is curing.

