Decorative Mailbox Posts – 4800 Series

Decorative Arm Post Installation Instructions

Installing Arm on a Decorative Mailbox Post

Thank you for selecting Salsbury's 4800 series decorative mailbox post. We are confident that the quality and construction of the post will prove to be a good investment.

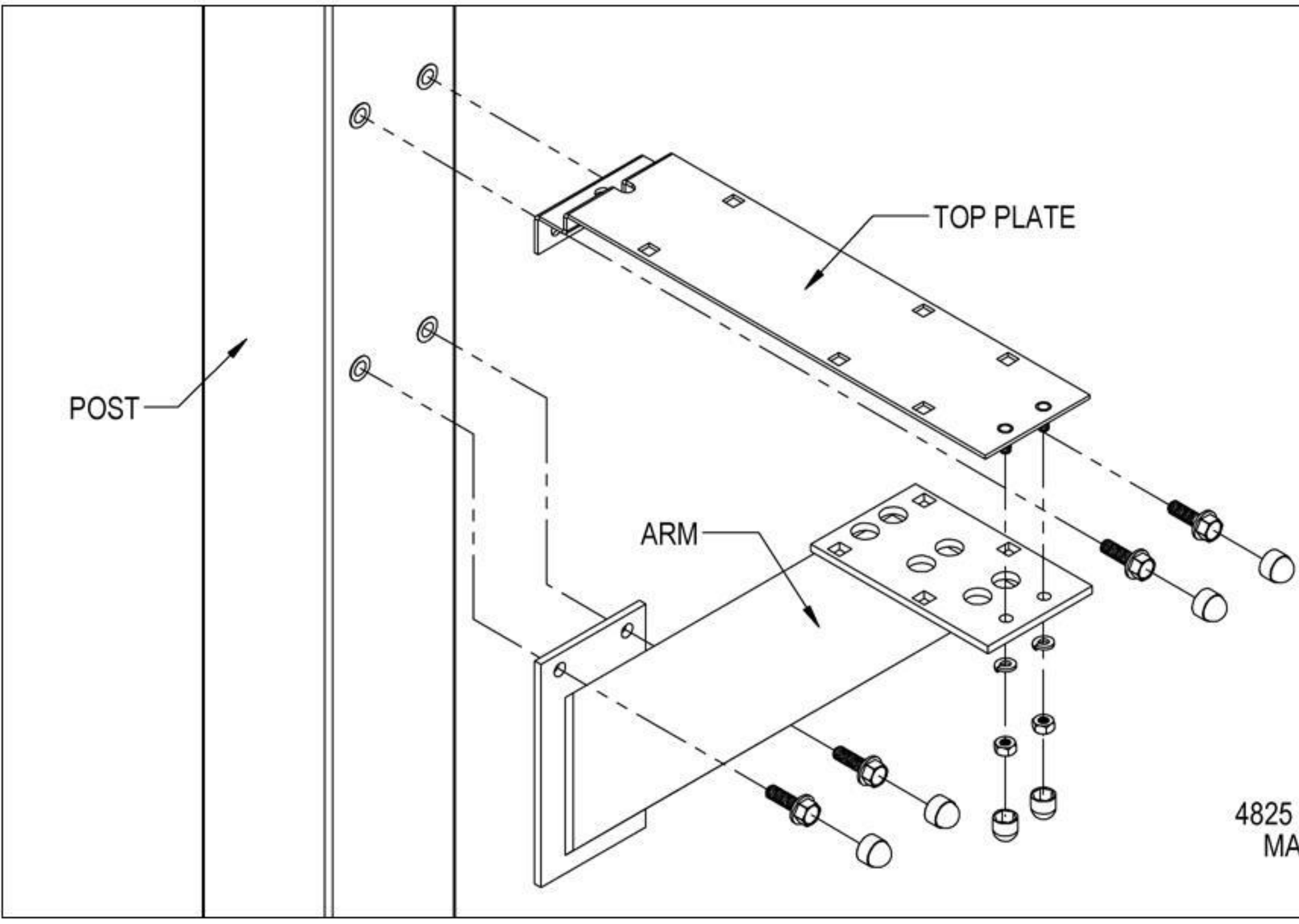

4825 MODERN DECORATIVE
MAILBOX POST SHOWN

This assembly instruction is for the decorative mailbox post only, including models 4825, 4835, and 4845.

See the installation instructions for the mailbox to install the mailbox on the post. The hardware kit for mounting the mailbox is included with this post.

The decorative mailbox post should be mounted on a concrete pad or in the ground before proceeding with assembly of the top plate and arm. See separate instructions for the post mounting process.

The top plate and arm must be assembled to the post as shown in the illustration. Install two (2) 5/16"-18 x 1" long hex flange head bolts through the two holes in the rear flange of the top plate into the upper two tapped holes in the decorative post. Leave the bolts loose.

Position the arm so that the two studs in the front of the top plate protrude through the holes in the front of the arm. Install two (2) 5/16"-18 x 1" long hex flange head bolts through the two (2) holes in the rear flange of the arm into the lower two (2) tapped holes in the decorative post. Also leave these bolts loose.

Install two (2) 1/4" split washers and two (2) 1/4"–20 nuts on the studs at the front of the top plate after ensuring that the two (2) studs are aligned through the holes in the front of the arm.

Securely tighten the four (4) hex flange head bolts and the two (2) hex nuts. Attach the appropriate plastic cover caps to the four (4) hex flange head bolts and the two (2) nuts. Additional hardware provided is not needed and may be discarded.

The mailbox may now be installed to the post.

Decorative Mailbox Posts – 4800 Series

Installation Instructions

U.S.P.S. APPROVED

Installing Mailbox on a Decorative Mailbox Post

Thank you for selecting Salsbury's decorative mailbox post.

This instruction sheet is for installing the 4850 series mailbox on a decorative mailbox post. Other installation instructions are available for installing the mailboxes on a standard mailbox post or on a deluxe mailbox post, installing the mailbox on spreaders, mounting a newspaper holder, and mounting the post in a concrete footing.

When you install a curbside or roadside mailbox, make sure that it is easily accessible to the mail carrier. By regulation it should be 41" to 45" from the ground or street surface up to the inside floor of the mailbox. The door should be set back 6" to 8" back from the front face of the curb or the road edge. However, you should check with your local postmaster to ensure that the mailbox is installed according to local regulations.

All hardware to install the mailbox is provided with the post. To install the mailbox, set the mailbox on the decorative mailbox post mounting plate, open the front door of the mailbox and install six (6) 5/16"-18 X 3/4" long carriage bolts into the six (6) square holes in the floor of the mailbox and through the six (6) square holes on the decorative mailbox post mounting plate. Install 5/16" flat washers and 5/16"-18 hex nuts on the ends of the six (6) bolts protruding below the bottom of the decorative mailbox post mounting plate. Cover the hex nuts with cap plugs.

Additional hardware provided is not needed and may be discarded.

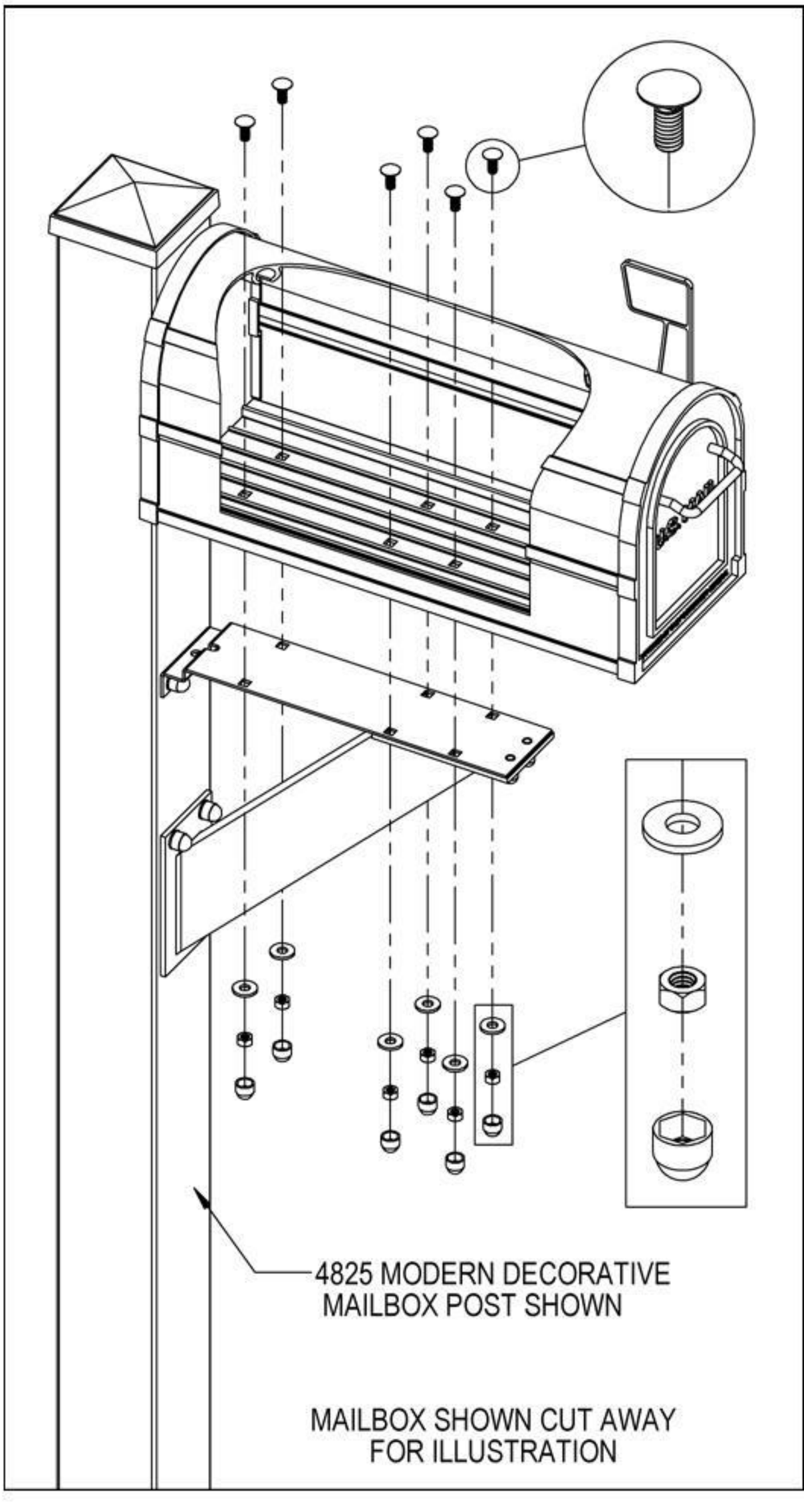

Decorative Mailbox Posts – 4800 Series

In-Ground Mounted Mailbox Post Installation Instructions

U.S.P.S. APPROVED

Installing the In-Ground Mounted Mailbox Post

When you install a curbside or rural mailbox, make sure that it is easily accessible to the mail carrier. By regulation it should be 41" to 45" from the ground or street surface up to the inside floor of the mailbox. The door should be set back 6" to 8" back from the front face of the curb or the road edge. However, you should check with your local postmaster to ensure that the mailbox is installed according to local regulations.

To install the in-ground mounted mailbox post, begin by digging a hole for the concrete footing and then prepare the concrete. The top surface of the footing should be about 12" by 18". See the illustration for the relative position of the rectangular footing to the post and mailbox. The concrete should extend into the ground 24" or greater if your local frost line is deeper. Installing the concrete below the frost line will prevent movement during ground freezing and thawing. The bottom of the hole for the concrete footing should be filled with a depth of about 6" of gravel to promote drainage under the post. The top of the footing should be sloped for water runoff.

When digging the hole for the footing, be careful to not puncture water, sewer, or gas lines.

After digging the hole, set the post in the hole and fill the hole with the prepared concrete mix. Prod the mix with a stick while filling to reduce any air pockets. If you want to conceal the concrete, pour it to within a few inches of the top of the hole and cover with soil after the concrete has set. Use a carpenter's level on the sides of the post to ensure that the post is aligned vertically. Periodically check the vertical alignment of the post as the concrete is curing.

