# Courier Boxes – 4975 Series
## Installation Instructions

Thank you for selecting the 4975 series courier box. The heavy-duty units are constructed of 14 gauge steel and feature a durable powder coat finish. They provide the utmost in security and can withstand severe weather conditions. We are confident that the quality and construction of the collection boxes will prove to be a good investment. The units are fully assembled and ready to be installed.

### Model 4975 Courier Box

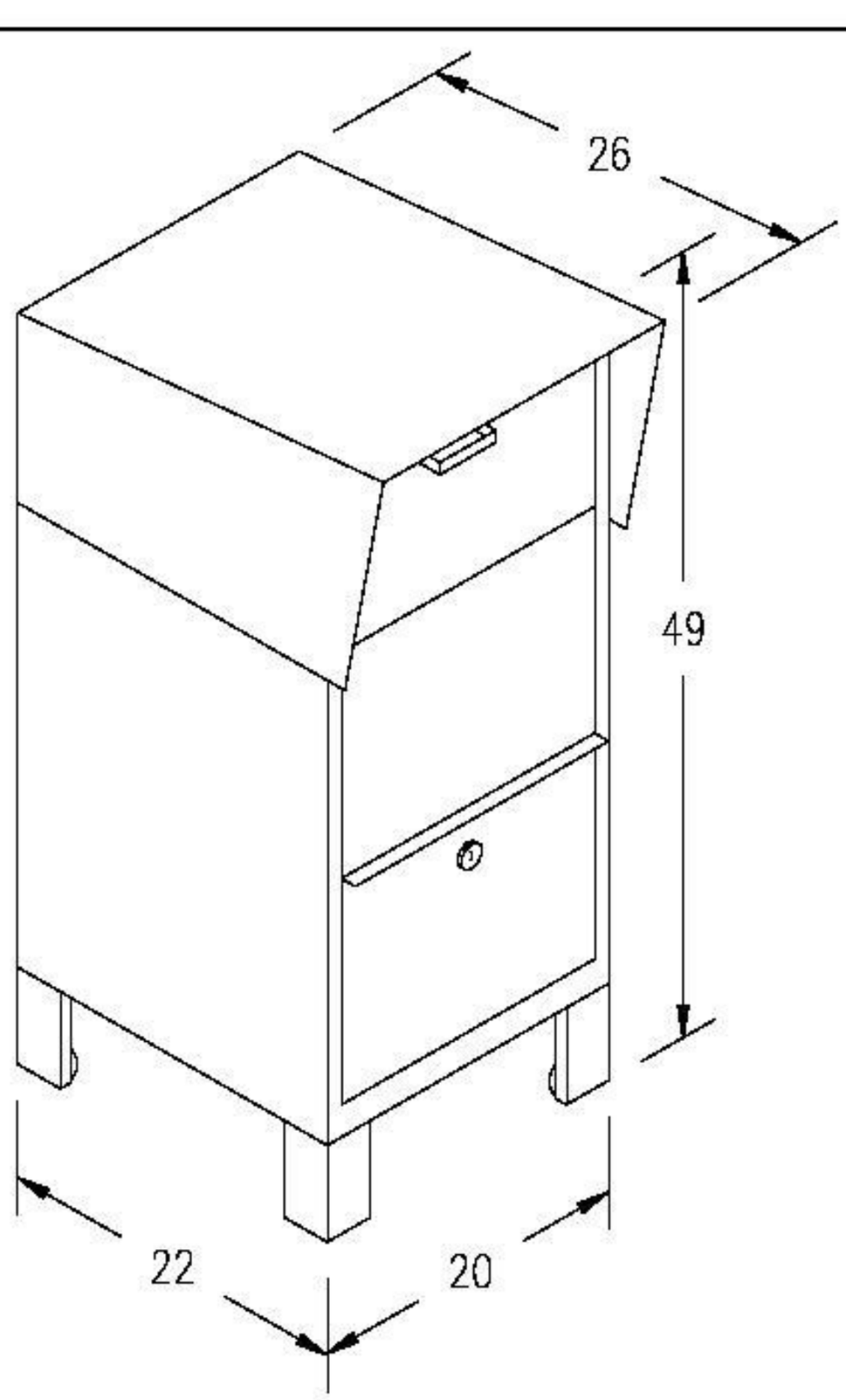


### Installation

Due to the various types of surfaces on which the courier boxes might be ultimately mounted, there is no installation hardware included with the unit. Select and procure the bolts and anchors according to the type of surface, be it wood, cement, or another material. In certain applications, it may not be necessary or desirable to fasten the unit down. However, before this decision is made, carefully consider the security of the courier box.

There is one 9/16" diameter hole in each of the four feet in the 4975 courier box to fasten the unit down to the surface on which it is placed. Lag screws with or without expansion anchors or bent anchor bolts (buried in concrete) with nuts may be used to fasten the units down, as an example. Suggested size is 3/8" diameter bolts.

The 4975 courier box includes an integral three-point locking system with two keys provided.