Column Mailboxes – 4145
Recessed Mounted Installation Instructions

Thank you for selecting Salsbury's 4145 Column Mailbox. We are confident that the quality and construction of the box will prove to be a good investment. The unit is fully assembled and ready for installation. These instructions are intended to assist you in a typical installation. They can be modified depending upon your choice in column style, materials and fastening. It is recommended to have the unit present before starting the construction to obtain the best possible installation.

Mailbox and Rough Opening Dimensions

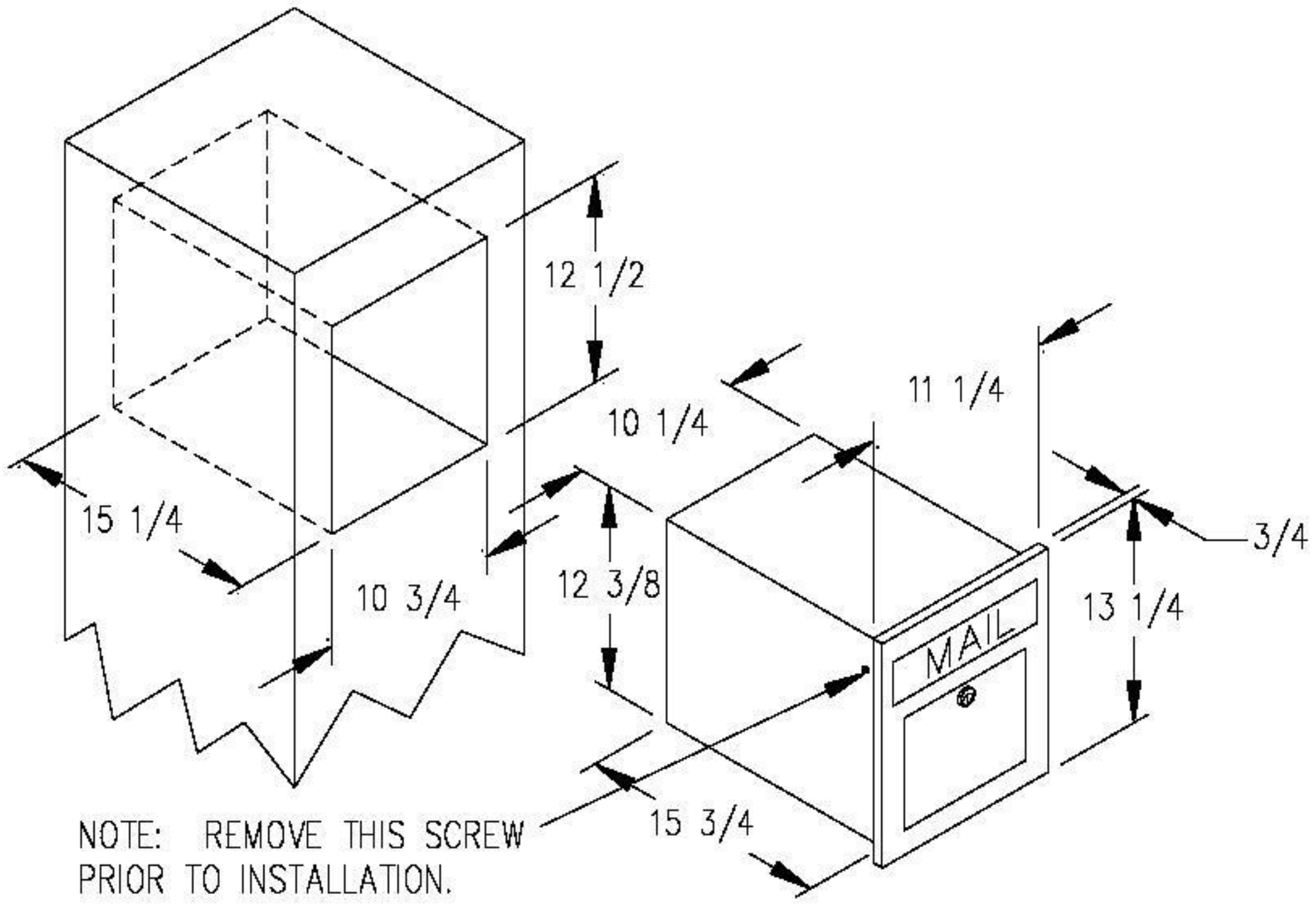

Installation

1. **Remove the screw on the left side of sheet metal box that is holding the brass flap closed for shipment.** Do not install box into rough opening until this screw is removed.

2. **Ensure that the rough opening is larger than the sheet metal box, especially in the upper area of the opening.** If the rough opening is too small and the box must be forced into the opening, it may press on the sheet metal box and interfere with opening the brass flap.

3. **Do not let the cement mortar touch the sides of the mailbox sheet metal box.** The weight of the cement could push on the box sidewall and interfere with opening the brass flap.

4. It is strongly suggested, when installing the mailbox into a masonry structure, that the mailbox be made removable by using screws to attach the sheet metal box into the rough opening. Any mailbox can develop unseen problems in the future, such as damage from vandalism. It is much easier to replace or repair the mailbox if it is removable.

Notes

1. Column or wall opening and lumber frame must be square.
2. Store keys in a safe place until ready for use.
3. Hardware is not included to fasten unit into rough opening.