CLUSTER BOX UNITS (CBU's)
INSTALLATION MANUAL
"F" SPECIFICATIONS

TYPE	I	II	III	IV
MODEL	3308	3312	3316	3313

TABLE OF CONTENTS

DESCRIPTION	*PAGE*
CBU INFORMATION	*2*
SITE PREPARATION AND PEDESTAL INSTALLATION	*3*
SECURITY TOOL REQUIREMENTS	*4*
INSTALLATION OF AN ARROW LOCK	*5*
PARCEL ARROW LOCK INSTALLATION	*7*
PEDESTAL TO CBU INSTALLATION	*9*

PEDESTAL TO CBU INSTALLATION

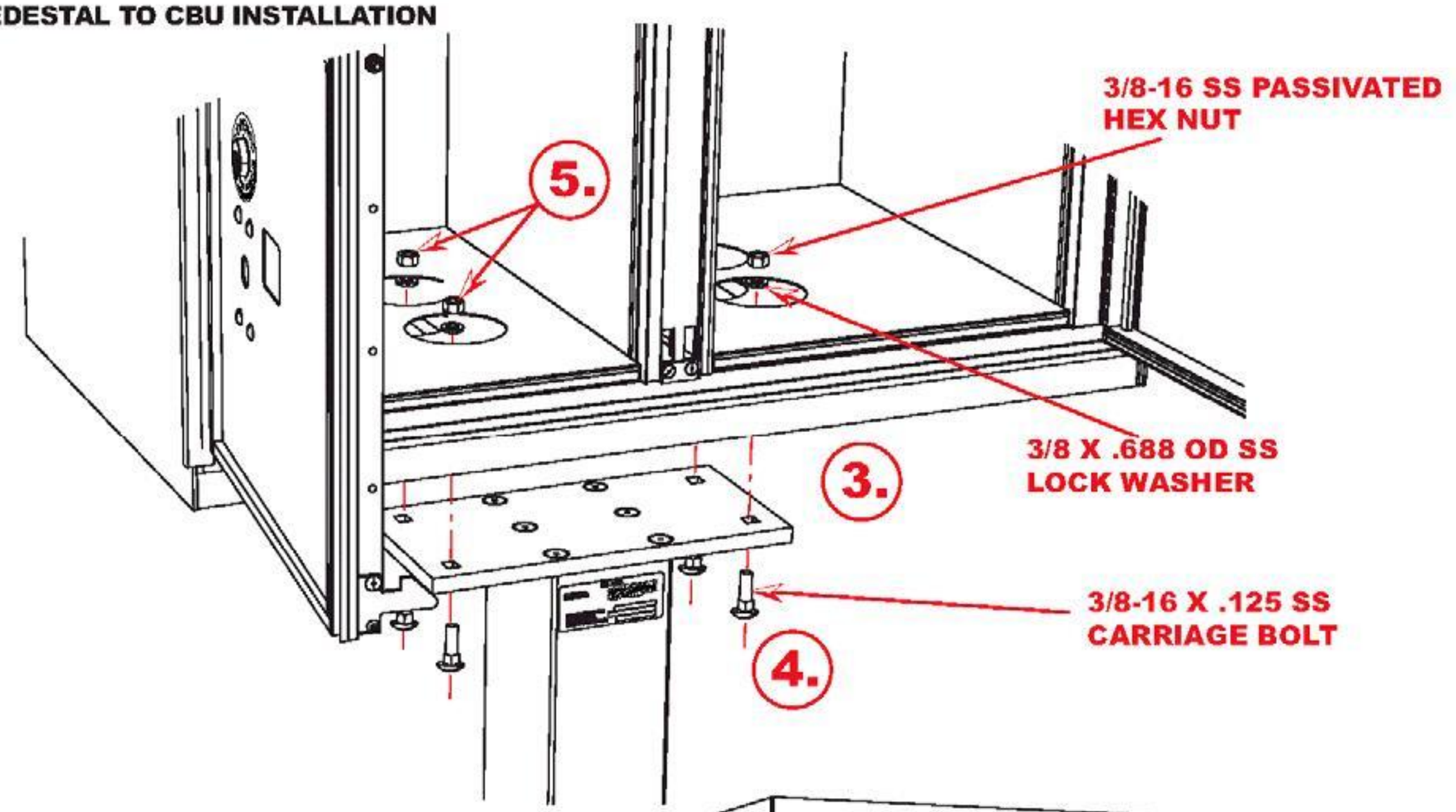

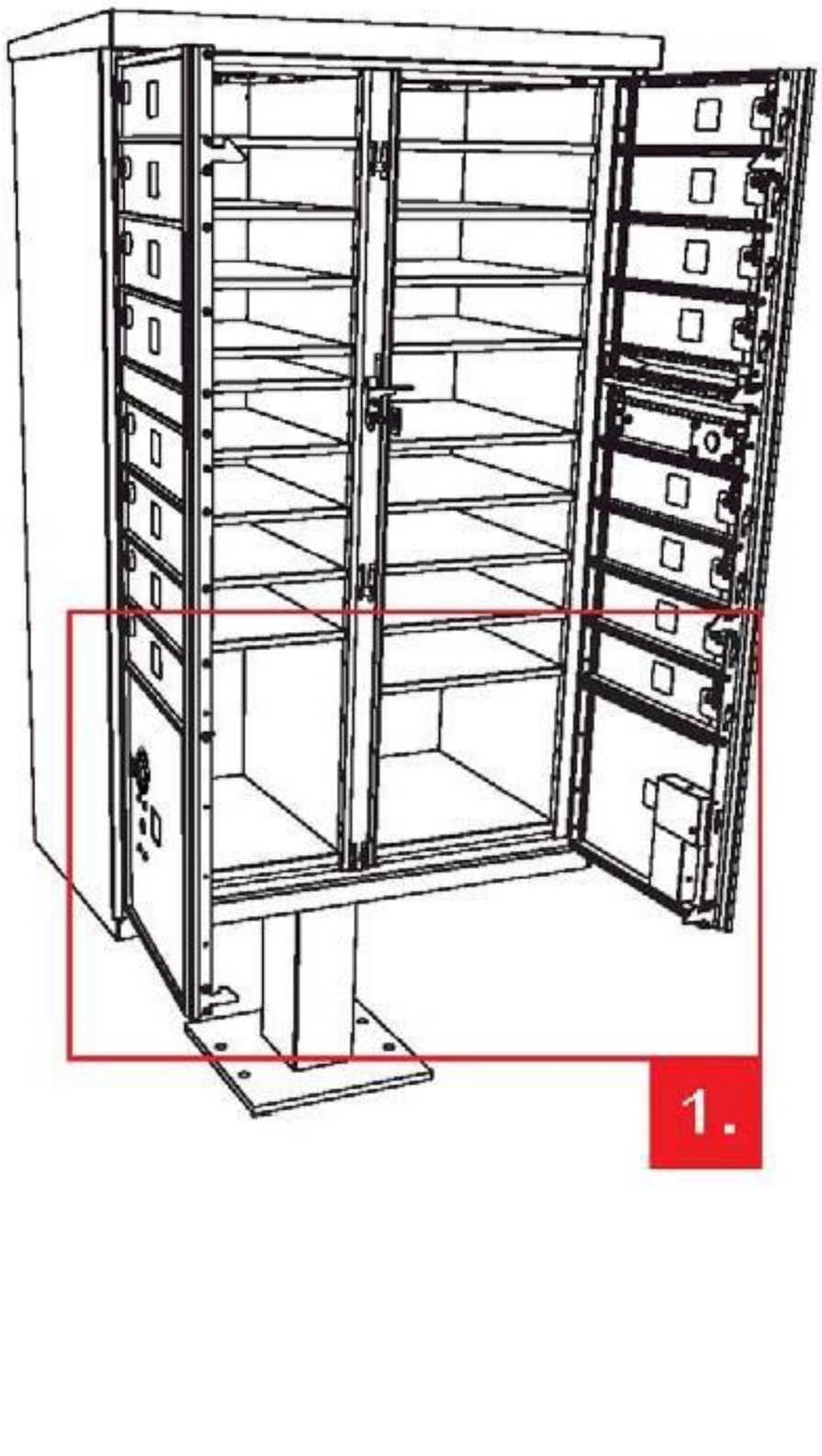

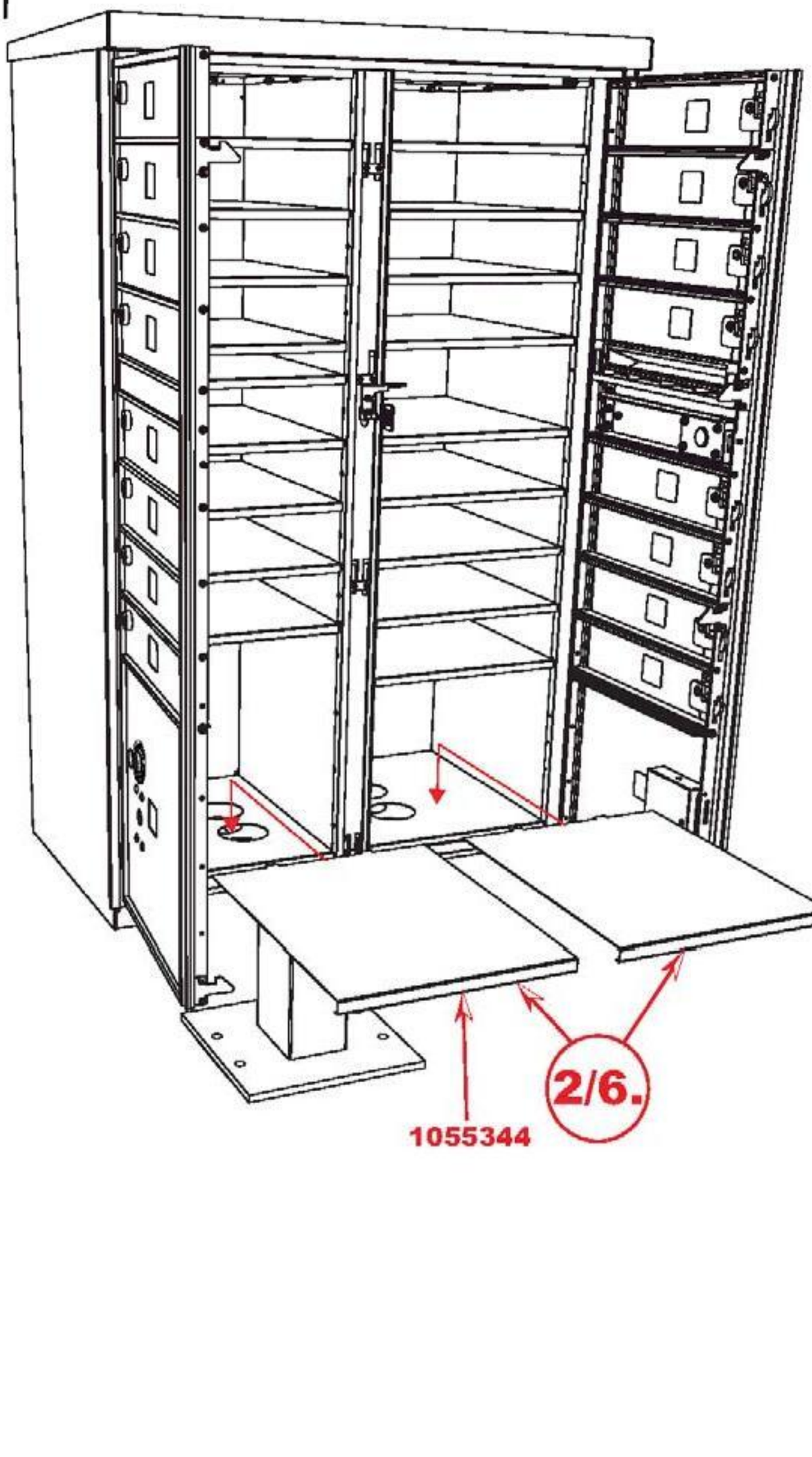

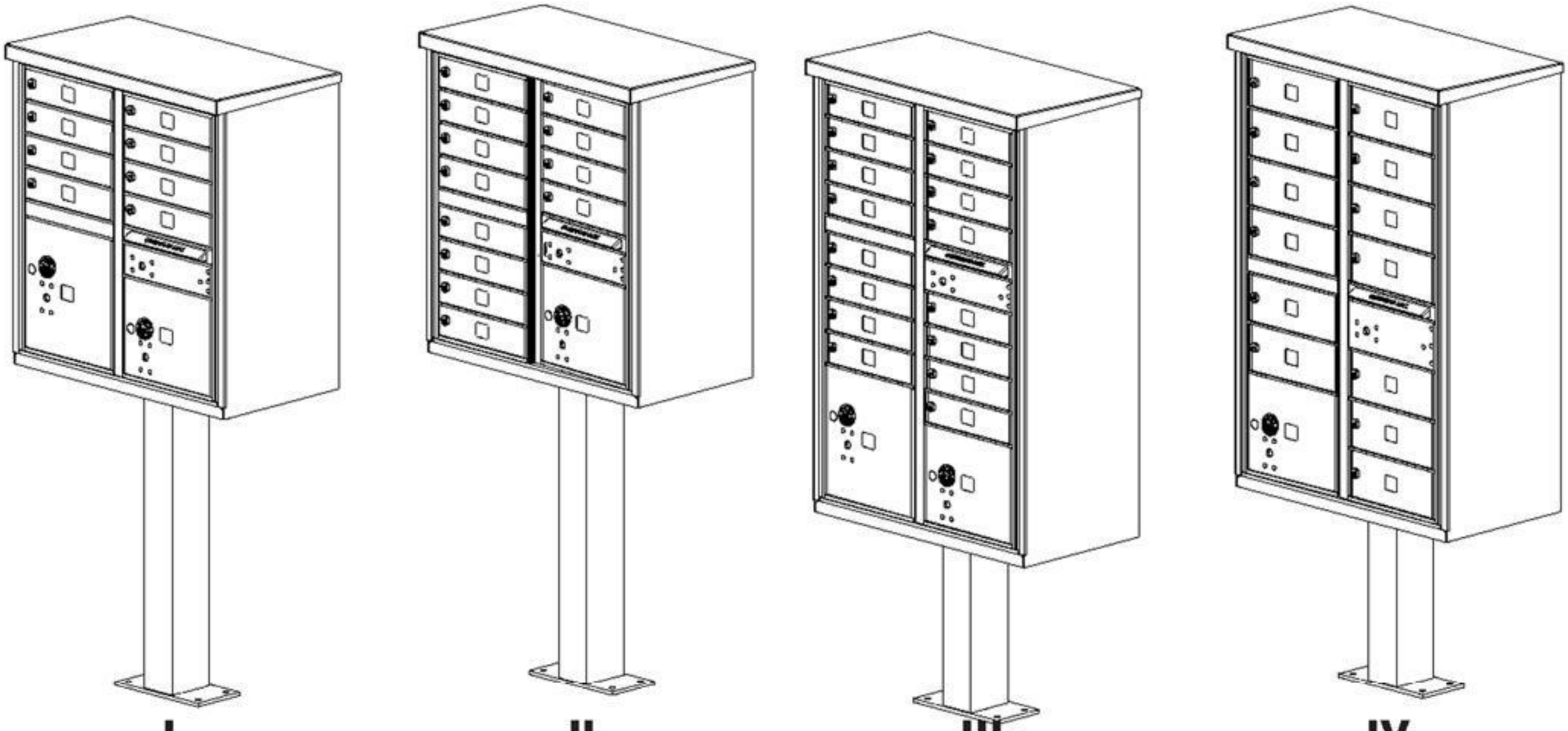

	TYPE I	TYPE II	TYPE III	TYPE IV
QTY OF STANDARD COMPARTMENTS	8	12	16	13
QTY OF PARCEL COMPARTMENTS	2	1	2	1
PARCEL COMPARTMENT HEIGHT	10", 13"	10"	10", 13"	10"

SINGLE UNIT

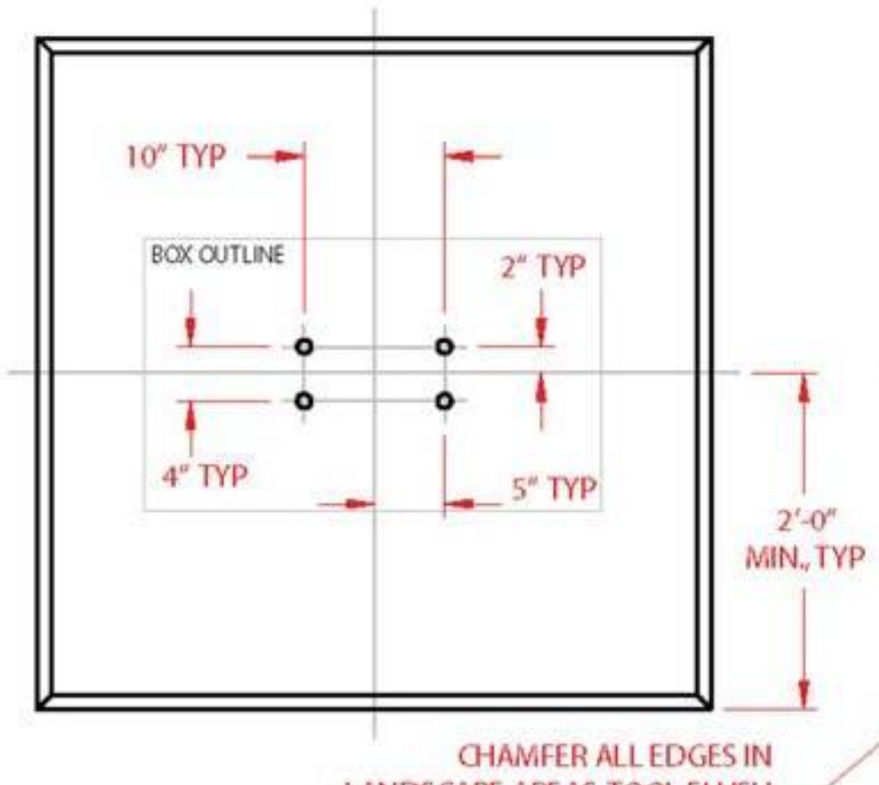

MULTI-UNITS

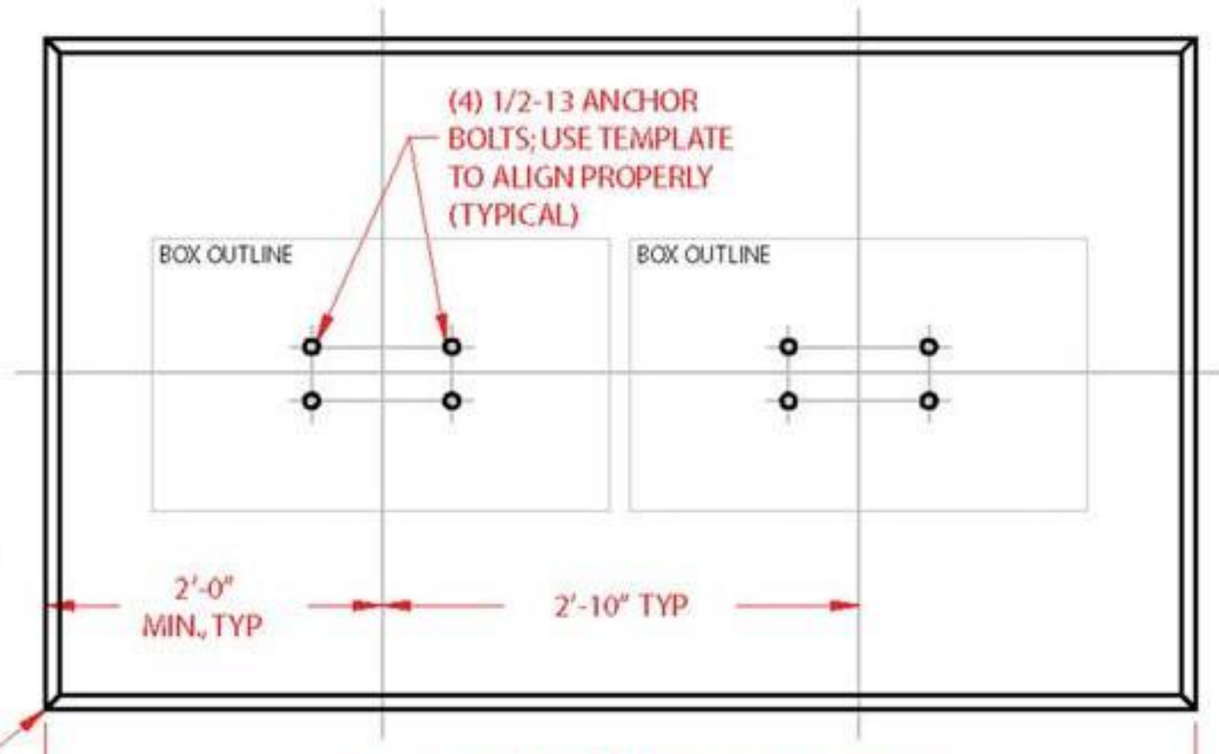

CHAMFER ALL EDGES IN LANDSCAPE AREAS, TOOL FLUSH WITH ADJOINING SURFACES IN PAVED AREAS.

ARRANGE MULTIPLE ANCHOR BOLT SETS AS REQUIRED; BASE NOT TO EXCEED 16'-0"

NOTE:
CONCRETE SHALL HAVE A COMPRESSIVE STRENGTH OF 3000 PSI @ 28 DAYS, CONTAIN 4% MIN. ~ 6% MAX AIR ENTRAPMENT AND BE PLACED WITH A 3.50 ~ 4.50 SLUMP IN ACCORDANCE TO 301.

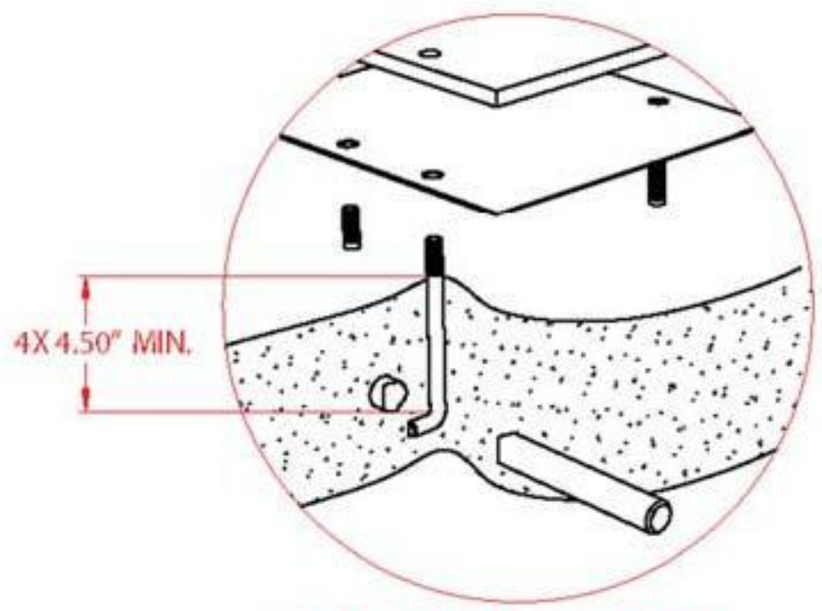

(CUTAWAY VIEW OF BAR SHOWN)

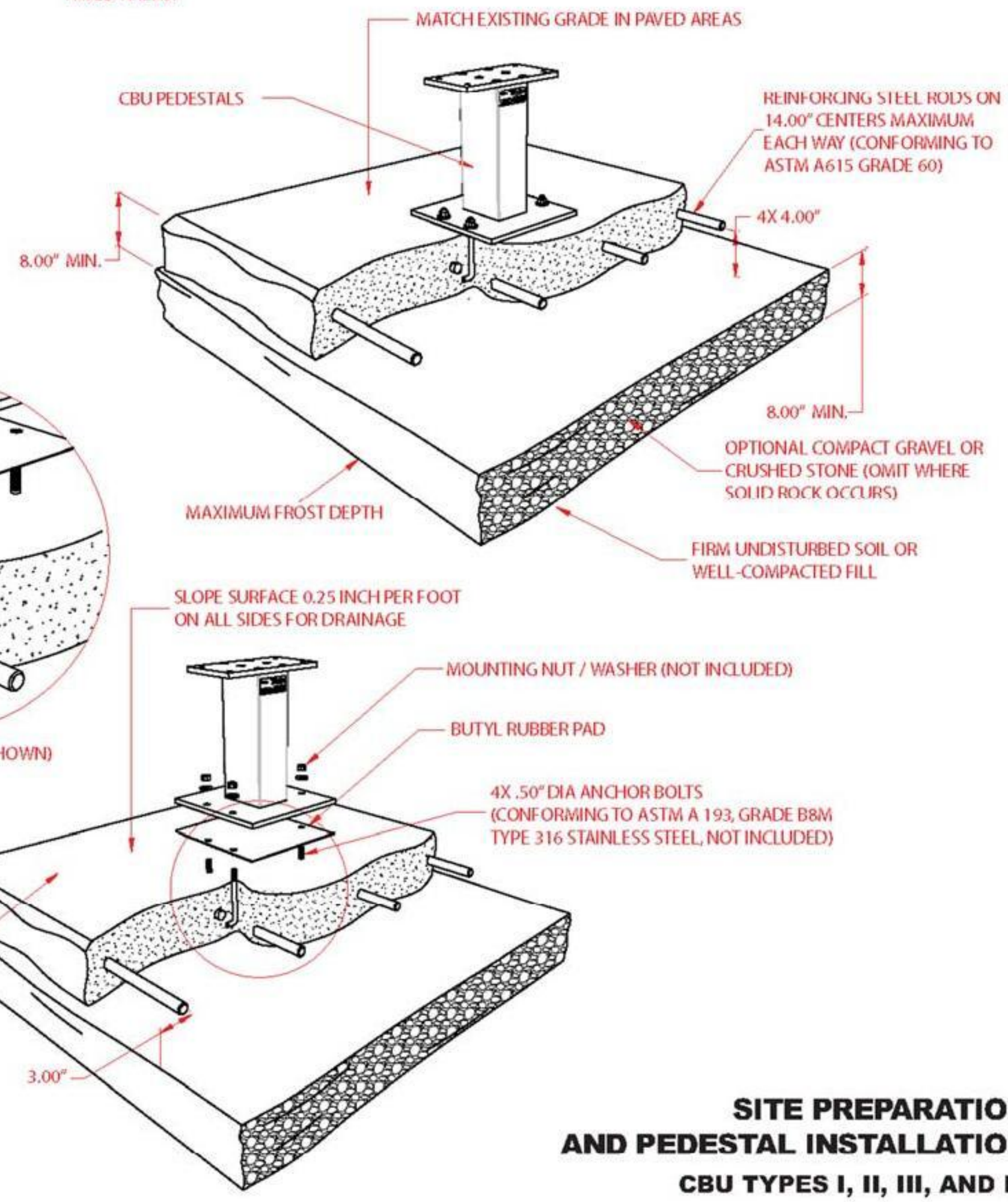

SITE PREPARATION AND PEDESTAL INSTALLATION

CBU TYPES I, II, III, AND IV

IMPORTANT NOTICE FOR USPS INSTALLERS

CBU TYPES I, II, III, AND IV

INSTALLER MUST ORDER McGARD SCREW DRIVER
(USPS – MAIL EQUIPMENT SHOP PART NUMBER 110050)
TO INSTALL AND SERVICE THE PARCEL ARROW LOCK COVER

IF THE
McGARD SCREW DRIVER MES NO. 110050
NEEDS TO BE ORDERED
IT MAY BE ORDERED BY FAXING AN "OFF CATALOG" eBUY REQUEST TO:

USPS MAIL EQUIPMENT SHOP
FAX NO. (202) 281-2643



INSTALLATION OF AN ARROW LOCK

CBU TYPES I, II, III, AND IV

1. *OPEN ARROW LOCK DOOR.*

2. *REMOVE FIVE (5) 10-32 STAINLESS STEEL LOCK NUTS W/ NYLON INSERT, AS WELL AS 1055372 LOCK SUPPORT PLATE (DISPOSE OF PLASTIC SHIPPING SPACER).*

3. *PLACE ARROW LOCK INTO 1055290 ARROW LOCK SECURITY BRACKET AND POSITION ON DOOR.*

4. *REPLACE ONE (1) 86091 10-32 STAINLESS STEEL LOCK NUT W/ NYLON INSERT IN THE REAR POSITION TO SECURE ARROW LOCK SECURITY BRACKET.*

5. *INSTALL 1055372 LOCK SUPPORT PLATE AS SHOWN*

6. *REPLACE FOUR (4) 10-32 STAINLESS STEEL LOCK NUTS W/NYLON INSERT. TORQUE 25 TO 30 INCH-POUNDS.*

REQUIRED TOOLS
3/8" SOCKET WRENCH

PART #	*DESCRIPTION*
	10-32 STAINLESS STEEL LOCK NUT W/ NYLON INSERT
1055372	LOCK SUPPORT PLATE
	ARROW LOCK
1055290	ARROW LOCK SECURITY BRACKET

INSTALLATION OF AN ARROW LOCK

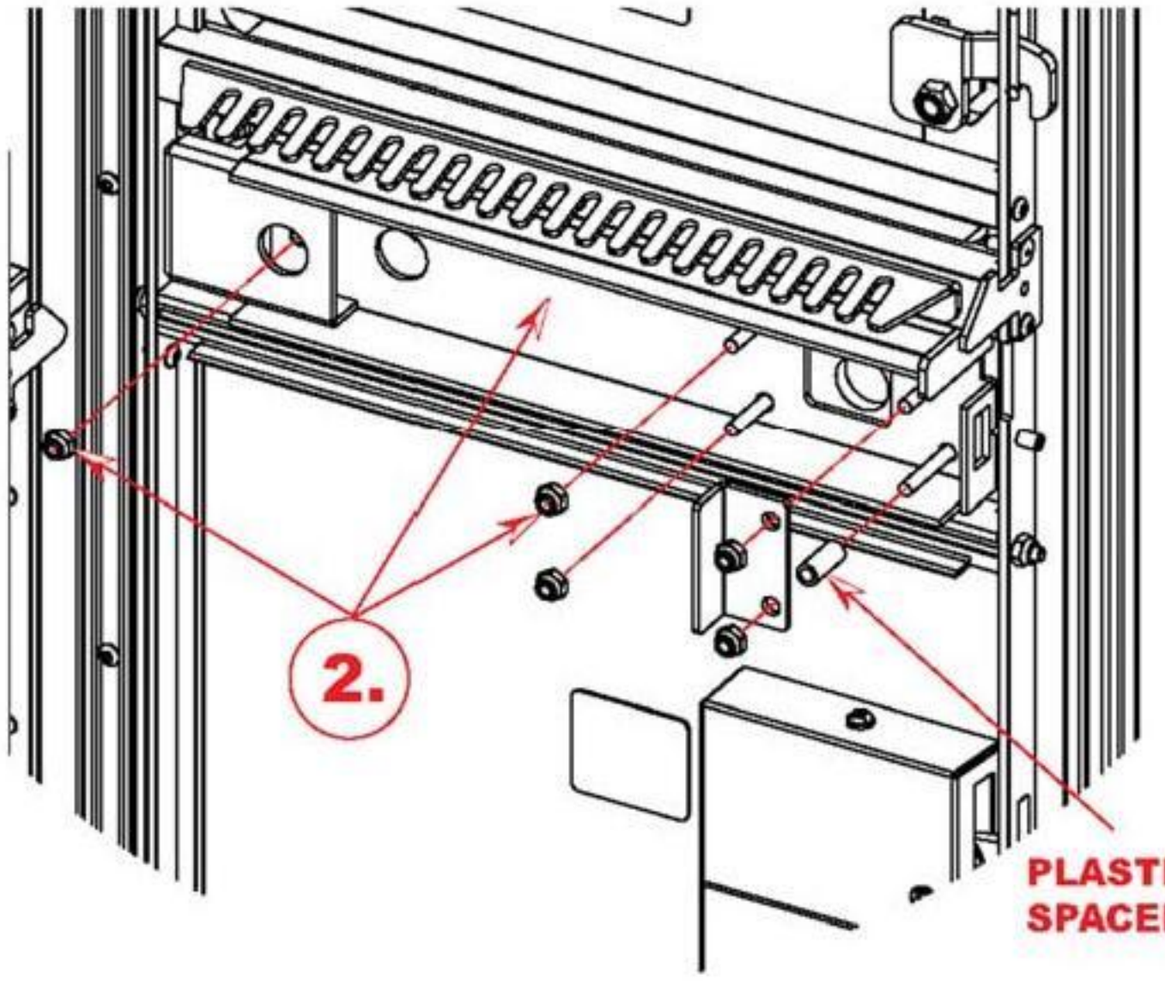

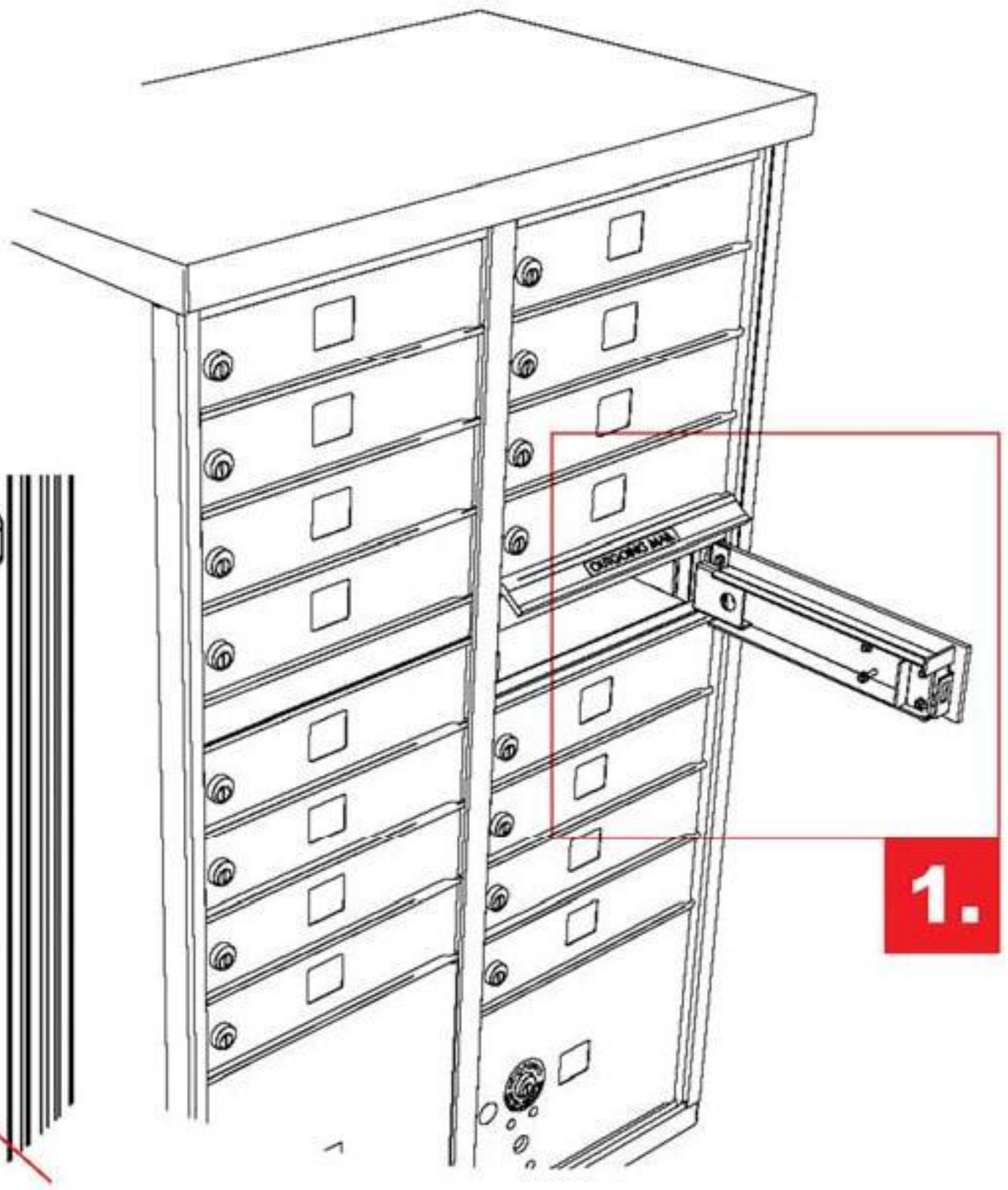

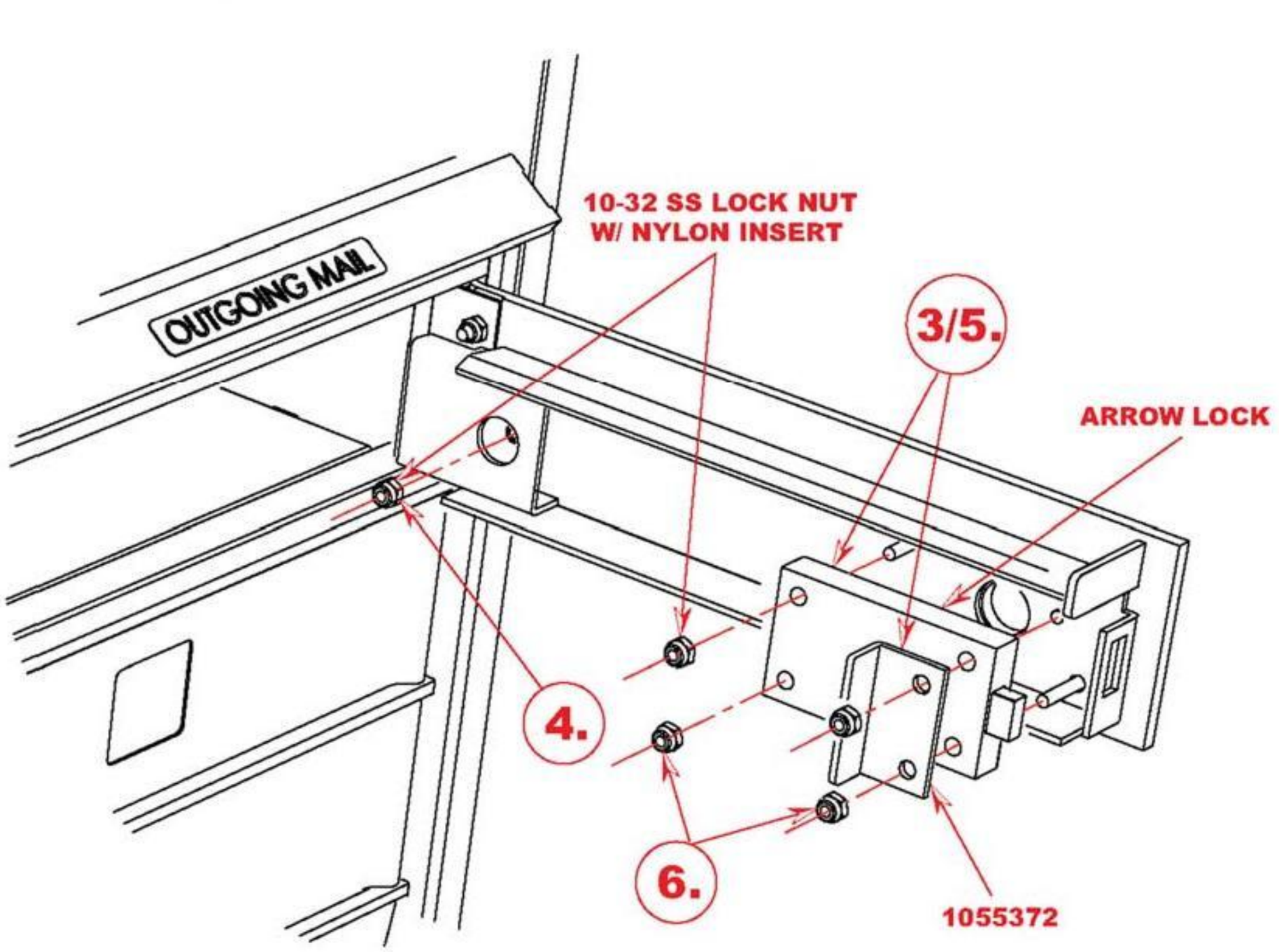

PARCEL ARROW LOCK INSTALLATION
CBU TYPES I, II, III AND IV

1. *OPEN PARCEL DOOR, REMOVE AND DISCARD FOUR (4) PLASTIC SHIPPING RETAINERS (TWO ON LATCHING ASSEMBLY COVER AND TWO ON ARROW LOCK COVER).*

2. *REMOVE PLASTIC BAG OF FASTENERS (IT CONTAINS ALL FASTENERS NECESSARY TO INSTALL POSTAL LOCK ON ONE PARCEL DOOR).*

3. *INSTALL ARROW LOCK AS SHOWN AND SECURE WITH FOUR (4) 10-32 STAINLESS STEEL LOCK NUTS W/ NYLON INSERT. TORQUE 25 TO 30 INCH-POUNDS.*

4. *INSTALL 1055359 LATCHING ASSEMBLY COVER USING THREE (3) 1055293 10-32 X .375 UNF-2A 18-8 SS PASSIVATED 1-WAY TAMPER PROOF FASTENERS.*

5. *INSTALL 1055361 ARROW LOCK COVER USING TWO (2) 1055292 10-32 X .312 UNF-2A 18-8 SS PASSIVATED MCGARD FASTENERS.*

6. *REMOVE LABEL FROM COVER.*

REQUIRED TOOLS
FLAT SCREWDRIVER
USPS PROPRIETARY MCGARD TOOL
3/8" SOCKET WRENCH
PLIERS

PART #	*DESCRIPTION*
1055292	10-32 x .312 UNF-2A 18-8 SS PASSIVATED MCGARD
1055293	10-32 X .375 UNF-2A 18-8 SS PASSIVATED 1-WAY TAMPER PROOF
	10-32 STAINLESS STEEL LOCK NUT W/ NYLON INSERT
1055359	LATCHING ASSEMBLY COVER
1055361	ARROW LOCK COVER
	ARROW LOCK

PARCEL ARROW LOCK INSTALLATION

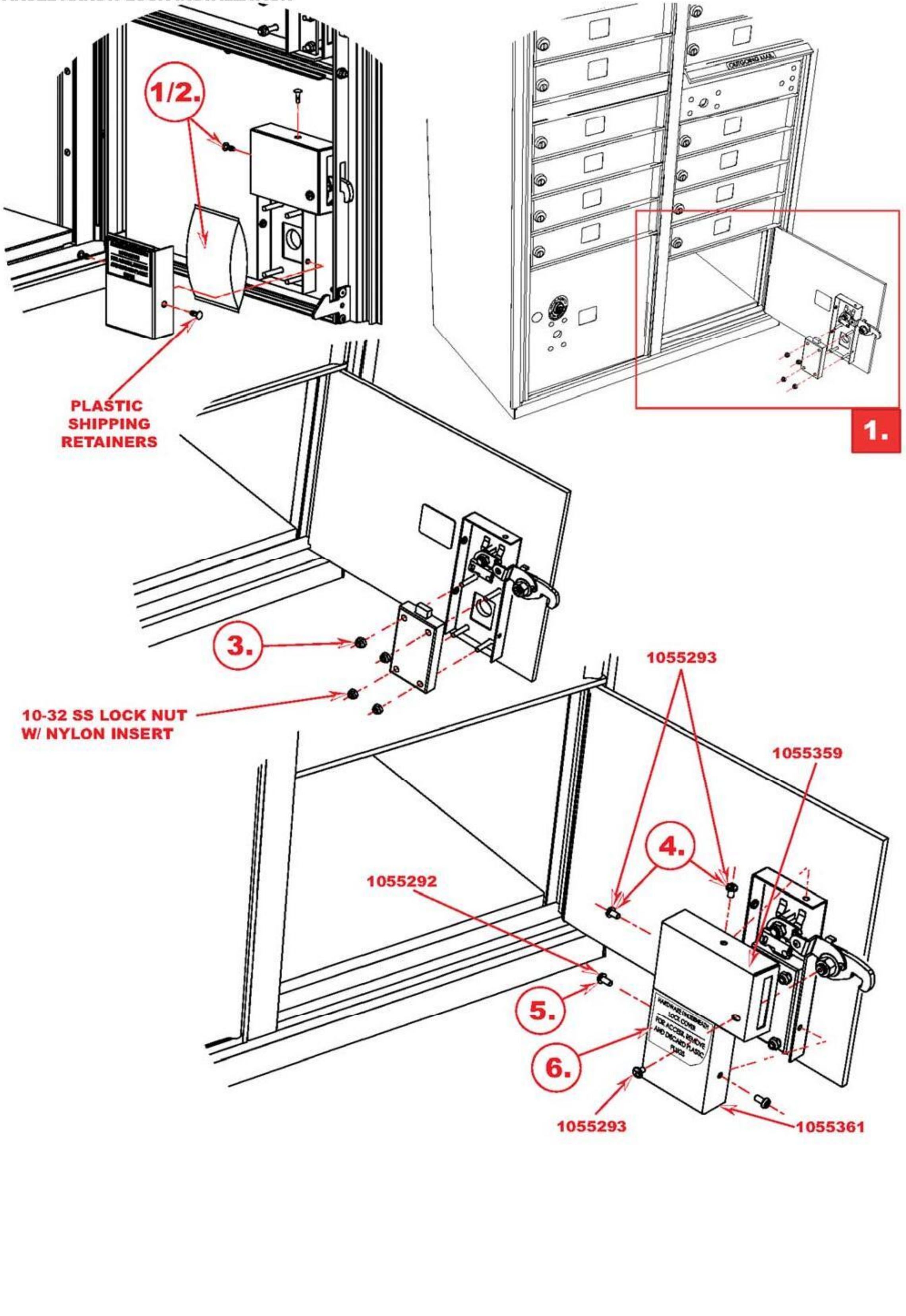

PEDESTAL TO CBU INSTALLATION
CBU TYPES I, II, III AND IV

1. *OPEN MASTER LOADING DOORS.*

2. *REMOVE LEFT AND RIGHT SIDE 1055344 FLOATING SHELVES, EXPOSING MOUNTING HOLES.*

3. *PLACE UNIT ON PEDESTAL.*

4. *FROM UNDERNEATH UNIT, INSERT FOUR (4) 3/8-16 X 1.25 STAINLESS STEEL CARRIAGE BOLTS UPWARD.*

5. *FROM INSIDE LOWEST COMPARTMENTS, ADD FOUR (4) 3/8" X .688 OD STAINLESS STEEL LOCK WASHERS AND TIGHTEN FOUR (4) 3/8-16 STAINLESS STEEL PASSIVATED HEX NUTS. TORQUE TO 22 FOOT-POUNDS.*

6. *REPLACE LEFT AND RIGHT SIDE 1055344 FLOATING SHELVES.*

REQUIRED TOOLS
9/16" SOCKET WRENCH

PART #	*DESCRIPTION*
	3/8-16 STAINLESS STEEL PASSIVATED HEX NUT
	3/8-16 X 1.25 STAINLESS STEEL CARRIAGE BOLT
1055344	FLOATING SHELF
	PEDESTAL FOR TYPE I, II
1055280	PEDESTAL FOR TYPE III, IV
	3/8" X .688 OD STAINLESS STEEL LOCK WASHER