Classic Mailbox Posts
4890 Top Mount Installation Instructions

Installing Mailbox on a Classic Mailbox Post

Thank you for selecting Salsbury's 4890 classic mailbox post. We are confident that the quality and construction of the post will prove to be a good investment.

This instruction sheet is for assembling the 4890 mailbox post and installing the mailbox on a Salsbury 4890 classic mailbox post. Other installation instructions are available for installing the mailbox on a 1-sided (4891) or 2-sided (4892) classic post and mounting the post in a concrete footing or into the ground.

When you install a curbside or roadside mailbox, make sure that it is easily accessible to the mail carrier. By regulation it should be 41" to 45" from the ground or street surface up to the inside floor of the mailbox. The door should be set back 6" to 8" back from the front face of the curb or the road edge. However, you should check with your local postmaster to ensure that the mailbox is installed according to local regulations.

First, attach the base to the post with the two bolts provided. **DO NOT OVERTIGHTEN THESE BOLTS.**

The top of the classic mailbox post has four tapped holes. There are four 5/16" hex washer head bolts provided with the post to attach the mailbox to the post. Open the front door of the mailbox and install the four hex washer head bolts through the four holes in the inside floor of the mailbox and through the four tapped holes on the top of the classic mailbox post.

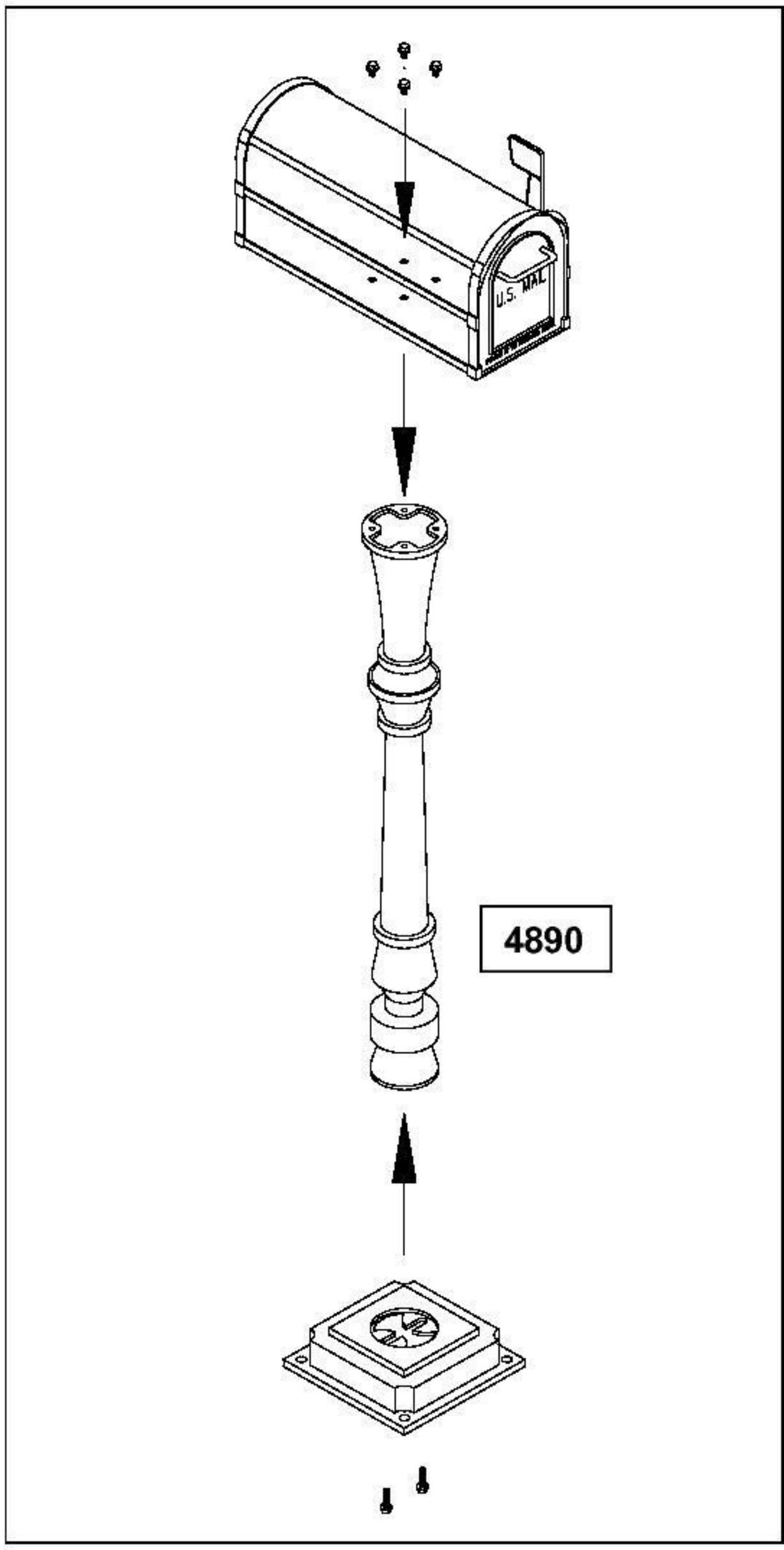

Classic Mailbox Posts

4891 and 4892 Side Mount Installation Instructions

Installing Mailbox on a Classic Mailbox Post

Thank you for selecting Salsbury's 4891 or 4892 classic mailbox post. We are confident that the quality and construction of the post will prove to be a good investment.

This instruction sheet is for assembling the 4890 mailbox post and installing the mailbox on a Salsbury 4891 (1-sided) or 4892 (2-sided) classic mailbox post. Other installation instructions are available for installing the mailbox on a 4890 classic post and mounting the post in a concrete footing or into the ground.

When you install a curbside or roadside mailbox, make sure that it is easily accessible to the mail carrier. By regulation it should be 41" to 45" from the ground or street surface up to the inside floor of the mailbox. The door should be set back 6" to 8" back from the front face of the curb or the road edge. However, you should check with your local postmaster to ensure that the mailbox is installed according to local regulations.

First, attach the base to the post with the two bolts provided. **DO NOT OVERTIGHTEN THESE BOLTS.**

The top of the classic mailbox post has four tapped holes. There are four 5/16" hex washer head bolts provided with the post to attach the 1-sided or 2-sided arm to the post.

The arm has one (4891) or two (4892) sets of four holes for attaching the mailbox(es). Open the front door of the mailbox and install the four 5/16" carriage bolts through the four holes in the inside floor of the mailbox and through the four holes on the arm of the classic mailbox post. Install the washers and acorn nuts to the carriage bolts underneath the arm. Repeat for mounting the second mailbox on a 4892 classic post.

Finish the installation by turning the finial onto the ½"-13 stud protruding from the top of the arm. Tighten the finial securely.

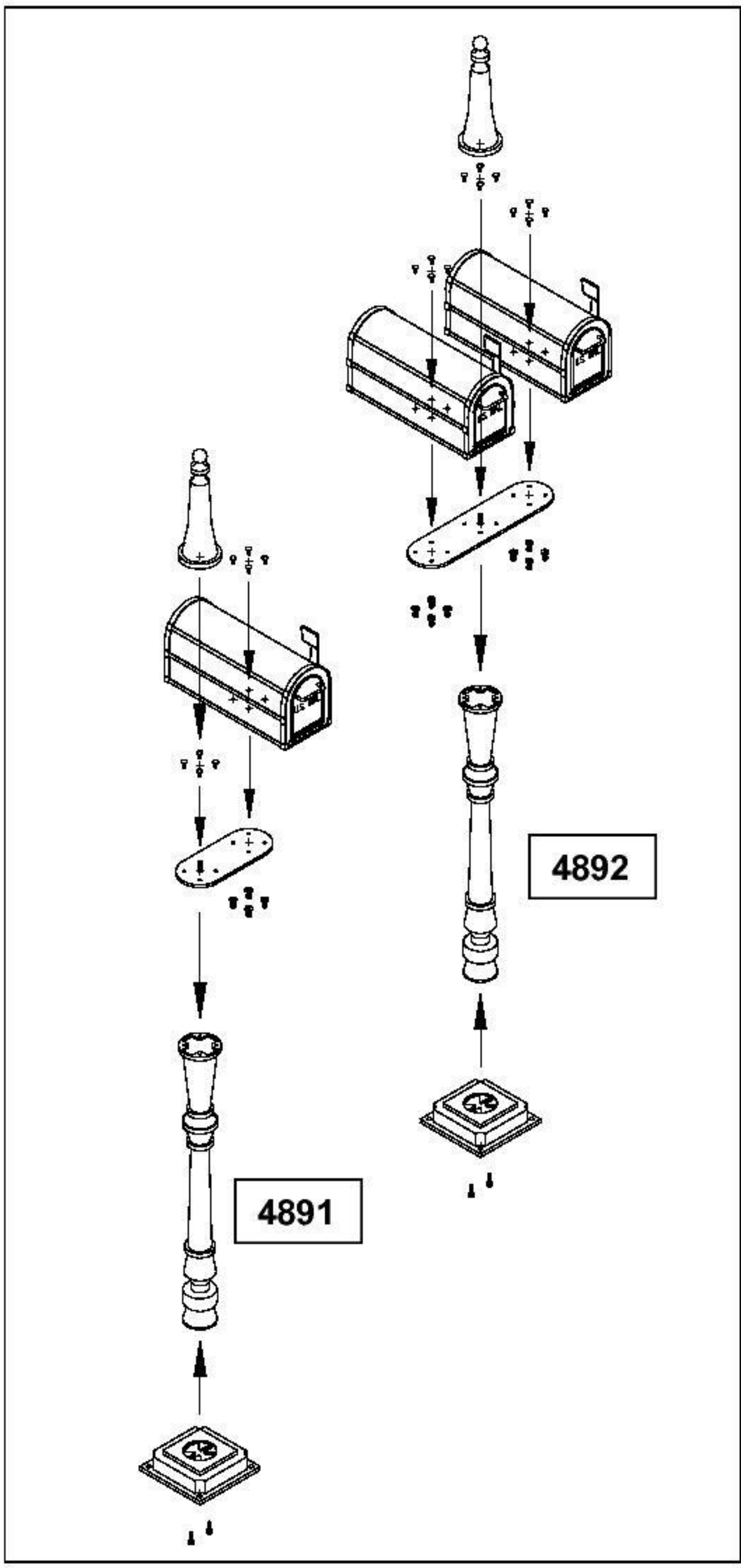

Classic Mailbox Posts
Bolt Mount Post Installation Instructions

Installing the Bolt Mounted Post onto Anchor Bolts

Thank you for selecting Salsbury's 4890, 4891, or 4892 classic mailbox post. We are confident that the quality and construction of the post will prove to be a good investment.

When you install a curbside mailbox, make sure that it is easily accessible to the mail carrier. The bolt mount pedestal is 42" high. By regulation it should be 41" to 45" from the ground or street surface up to the inside floor of the mailbox. The door should be set back 6" to 8" back from the front face of the curb or the road edge. However, you should check with your local postmaster to ensure that the mailbox is installed according to local regulations.

Dig the hole for the concrete footing, and prepare the concrete. You will need approximately 4-1/2 cubic feet. The top surface of the footing should be about 15" by 15" and extend 36" into the ground. See the illustration for the relative position of the rectangular footing to the post and mailbox. The bottom of the hole for the concrete footing should be filled with about 6" of gravel to promote drainage under the post. The top of the footing should be sloped for water runoff.

The concrete must be below the frost line. Otherwise the post will move if the ground freezes. Be careful not to puncture water, sewer, or gas lines when digging holes for footing.

Attach four (4) 3/8" diameter J-shaped or L-shaped anchor bolts to the base of the post with 4 nuts under and 4 nuts over the mounting holes. Pour the concrete into the hole, prodding the mix with a stick while filling to reduce any air pockets. Press the anchor bolts on the bottom of the post into the concrete until the bottom plate is resting on the top surface of the wet concrete. Use a carpenter's level on the sides of the post to ensure that the post is aligned vertically. Periodically check the vertical alignment of the post as the concrete is curing.

The concrete will shrink as it hardens, leaving a space between the anchor and the concrete when it is cured. To prevent this, loosen the top nut one full turn prior to inserting into the wet concrete. After the anchor is inserted into the wet concrete, place your foot on the top of the threaded anchor and push down until the top nut is pressed against the anchor plate. After the concrete has hardened, re-tighten the top nut.

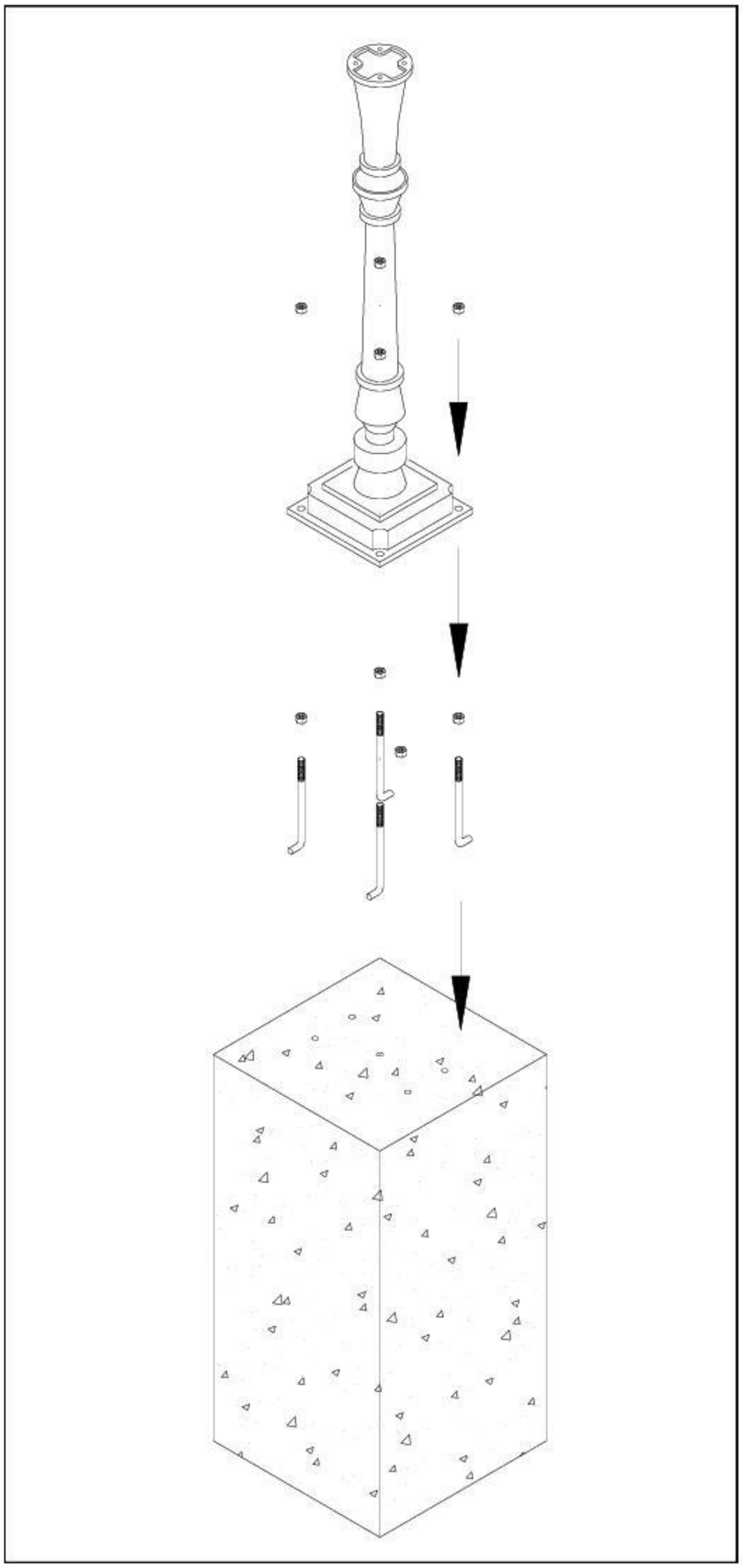

Classic Mailbox Posts

4896 In-Ground Mounting Kit Installation Instructions

Installing the In-Ground Mounting Kit into Concrete

Thank you for selecting Salsbury's 4896 in-ground mounting kit for attaching to a 4890, 4891, or 4892 classic mailbox post. We are confident that the quality and construction of the kit will prove to be a good investment.

Notes

When you install a curbside or rural mailbox, make sure that it is easily accessible to the mail carrier. By regulation it should be 41" to 45" from the ground or street surface up to the inside floor of the mailbox. The door should be set back 6" to 8" from the front face of the curb or the road edge. However, you should check with your local postmaster to ensure that the mailbox is installed according to current local regulations.

The concrete footing must extend below the frost line. Otherwise the post will move when the ground freezes. Modify the depth of the concrete footing accordingly.

Be careful not to puncture water, sewer, or gas lines when digging holes for footing.

Instructions

Attach the mailbox post to the in-ground mounting kit with the four (4) 3/8"-16 hex washer head bolts and plastic bolt-head covers provided in the in-ground mounting kit.

Dig a hole 30" deep for the concrete footing, and prepare the concrete. You will need approximately 3-1/4 cubic feet. The top surface of the concrete footing should be about 15" by 15" and extend at least 24" into the ground. The bottom of the hole for the concrete footing should be filled with about 6" of gravel to promote drainage under the post. The top edges of the concrete footing should be sloped for water runoff.

Set the mailbox post and in-ground mounting kit into the hole while filling the hole to the desired height with the prepared concrete mix. Prod the mix with a stick while filling to reduce any air pockets. If you want to conceal the concrete, pour it to within a couple of inches of the top of the hole and cover with soil after the concrete has set. (Make certain that the height of the mailbox complies with postal service regulations outlined above.) Use a carpenter's level on the sides of the post to ensure that the post is aligned vertically. Periodically check the vertical alignment of the post as the concrete is curing.

