Antique Rural Mailboxes – 4850A

Standard Mailbox Post Installation Instructions

U.S.P.S. APPROVED

Installing Mailbox on a Standard Mailbox Post

Thank you for selecting Salsbury's 4850A antique rural mailbox.

This instruction sheet is for installing the 4850A mailbox on a standard mailbox post. Other installation instructions are available for installing the mailboxes on a decorative mailbox post or on a deluxe mailbox post, installing the mailbox on spreaders, mounting a newspaper holder, and mounting the post in a concrete footing.

When you install a curbside or roadside mailbox, make sure that it is easily accessible to the mail carrier. By regulation it should be 41" to 45" from the ground or street surface up to the inside floor of the mailbox. The door should be set back 6" to 8" back from the front face of the curb or the road edge. However, you should check with your local postmaster to ensure that the mailbox is installed according to local regulations.

All hardware to install the mailbox is provided with the post. To install the mailbox, set the mailbox on the standard mailbox post, open the front door of the mailbox and install four (4) 5/16" - 18 x 2" long pan head bolts through the four (4) square holes in the inside floor of the mailbox and through the four (4) tapped holes on the top plate of the standard mailbox post.

Additional hardware provided is not needed and may be discarded.

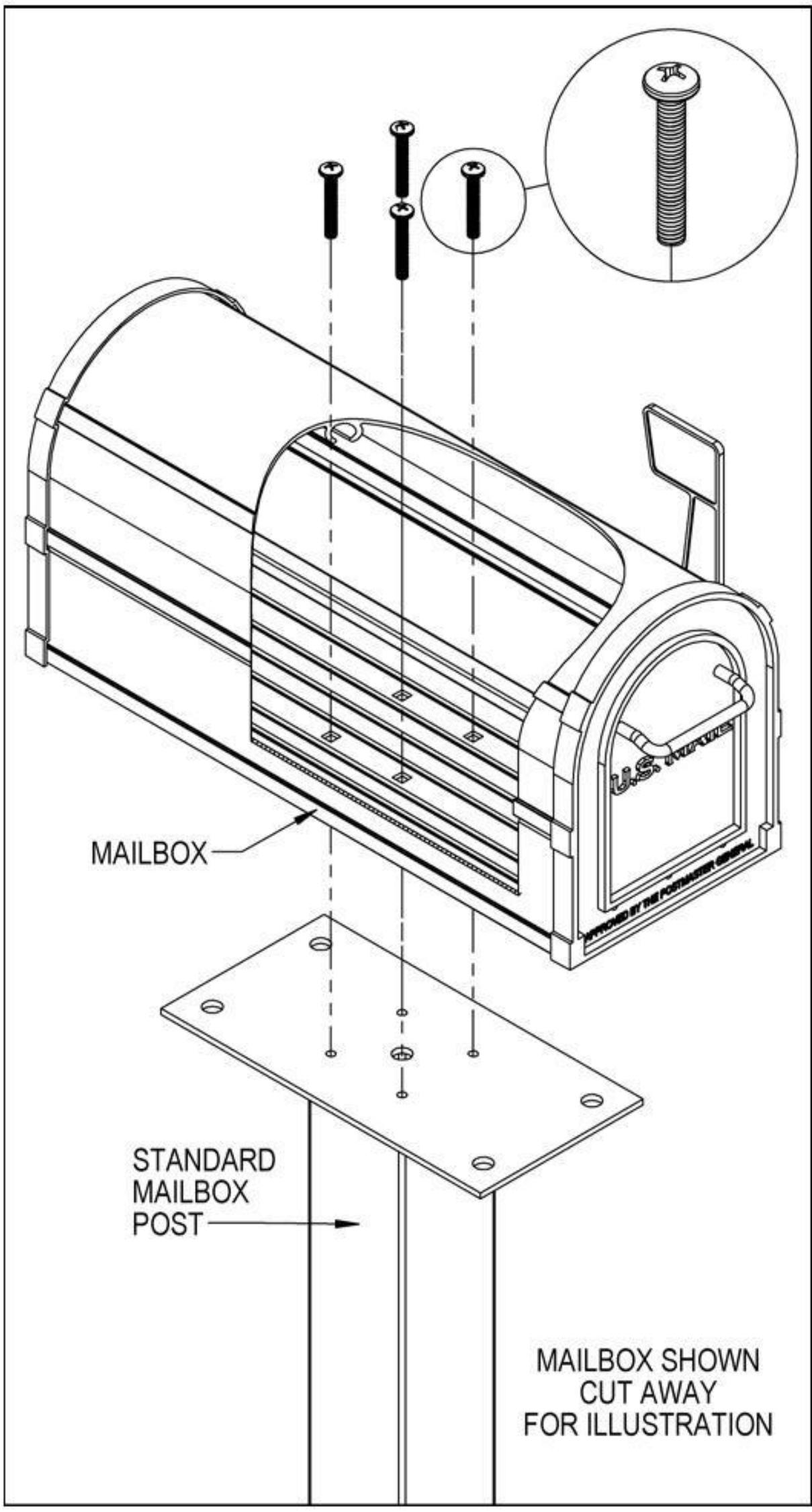

Antique Rural Mailboxes – 4850A

2-Wide and 4-Wide Spreader with Antique Newspaper Holders on a Standard Mailbox Post Installation Instructions

U.S.P.S. APPROVED

Installing Mailboxes on 2-Wide & 4-Wide Spreader with Newspaper Holders on a Standard Mailbox Post

Thank you for selecting Salsbury's 4850A antique rural mailbox.

This instruction sheet is for installing 4850A antique rural mailboxes on 2-wide and 4-wide spreaders with 4815A antique newspaper holders and a standard mailbox post. Different instruction sheets are available for installing 4850A antique rural mailboxes on 3-wide or 5-wide spreaders with 4815A antique newspaper holders and a standard mailbox post. Other installation instructions are available for installing the mailboxes and spreaders with newspaper holders on a modern decorative mailbox post, mounting a single mailbox on a decorative or standard mailbox post, mounting a single newspaper holder, and mounting the post in a concrete footing.

When you install a curbside or roadside mailbox, make sure that it is easily accessible to the mail carrier. By regulation it should be 41" to 45" from the ground or street surface up to the inside floor of the mailbox. The door should be set back 6" to 8" back from the front face of the curb or the road edge. However, you should check with your local postmaster to ensure that the mailbox is installed according to local regulations.

Spreader Installation to Standard Post

The installation of the 2-wide or 4-wide spreader to the standard mailbox post is the same. All hardware to attach the spreader to the standard mailbox post is included with the spreader. To attach the spreader to the standard mailbox post, install four (4) 5/16"-18 X 1" long hex flange head bolts through the four (4) center square holes of the spreader and through the four (4) tapped holes on the top plate of the standard mailbox post. Cover the hex flange head bolts with cap plugs.

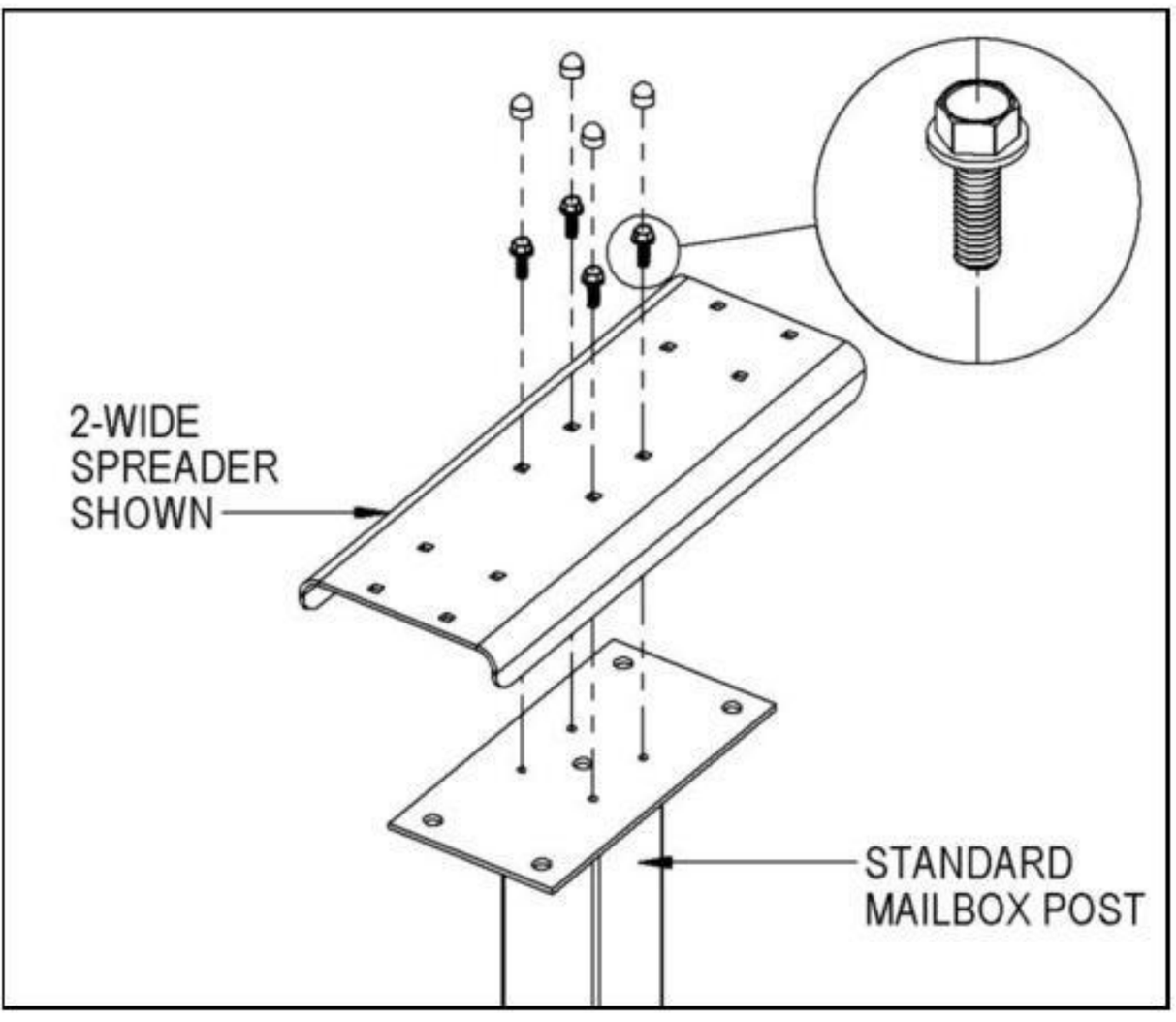

Newspaper Holders Installation to Spreader

Installation of newspaper holders to the 2-wide or 4-wide spreader is the same. Attach two (2) additional newspaper holders to the 4-wide spreader. All hardware to attach the newspaper holders to the spreader is included with the spreader. To attach a newspaper holder to the spreader, install four (4) 5/16"-18 x 1-3/4" long carriage bolts through the four (4) square holes shown in the inside floor of the newspaper holder and through the four (4) corresponding holes on the spreader. Install 5/16" flat washers and 5/16"-18 hex nuts on the ends of the four (4) bolts protruding below the bottom of the spreader. Repeat these steps for the other newspaper holder(s).

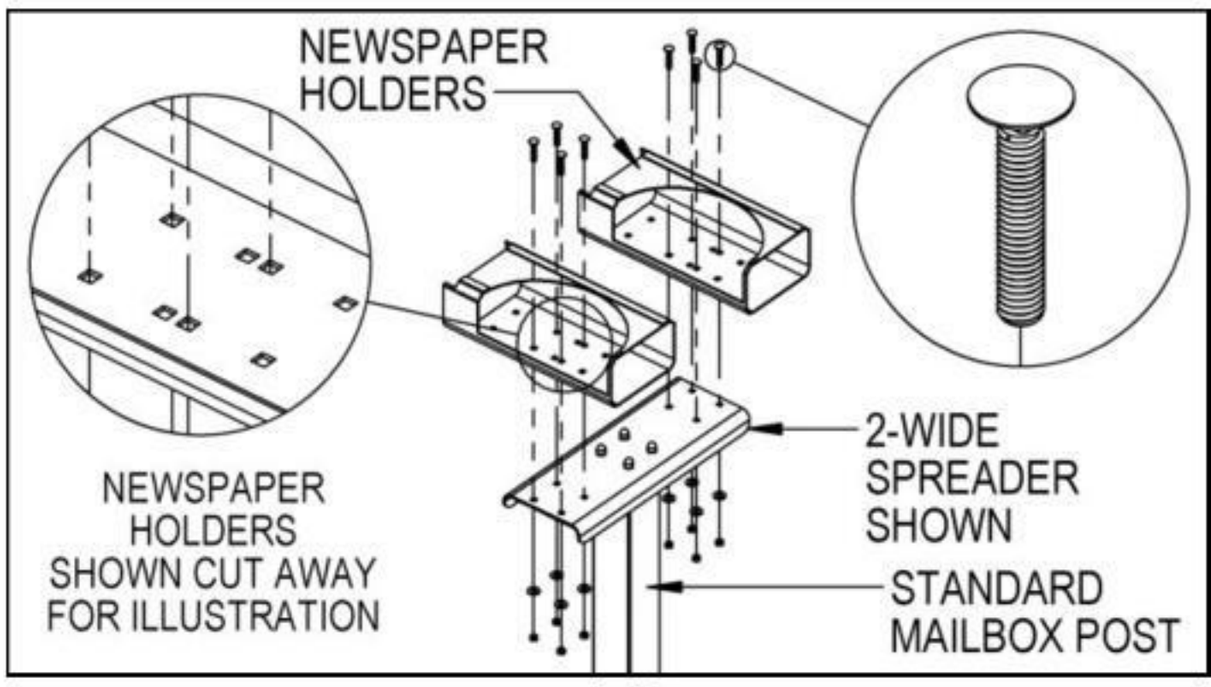

Mailbox Installation to Newspaper Holders

Installation of the mailbox to the newspaper holder is the same on the 2-wide or 4-wide spreader. Attach two (2) additional mailboxes to the newspaper holders on the 4-wide spreader. All hardware to attach the mailboxes to the newspaper holders is included with the newspaper holders. To attach a mailbox to a newspaper holder, install four (4) 5/16"-18 X 3/4" long carriage bolts into (4) square holes in the floor of the mailbox and through the four (4) square holes shown on the top of the newspaper holder. Install 5/16" flat washers and 5/16"-18 hex nuts on the ends of the four (4) bolts protruding below the top of the newspaper holder. Cover the hex nuts with cap plugs. Repeat these steps for the other mailbox(es). Installation is now complete. Additional hardware provided is not needed and may be discarded.

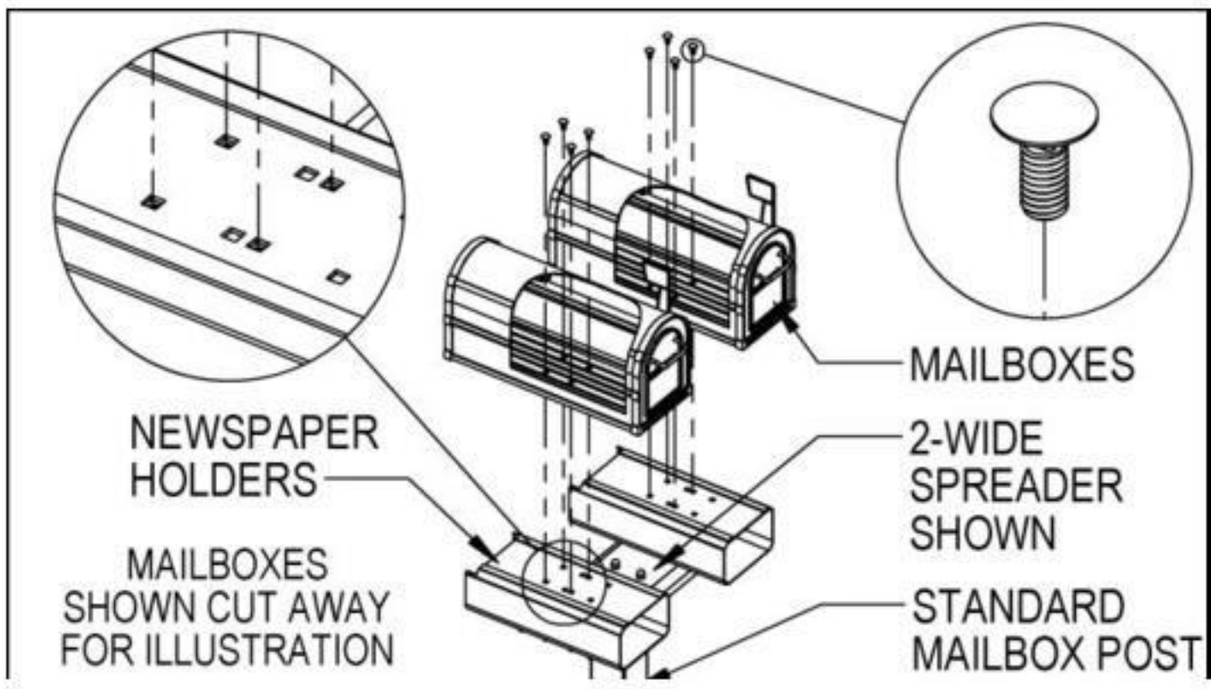

Antique Rural Mailboxes – 4850A
3-Wide Spreader with Antique Newspaper Holders on a Standard Mailbox Post Installation Instructions

U.S.P.S. APPROVED

Installing Mailboxes on Spreader with Newspaper Holders on a Standard Mailbox Post

Thank you for selecting Salsbury's 4850A antique rural mailbox.

This instruction sheet is for installing 4850A antique rural mailboxes on a 3-wide spreader with 4815A antique newspaper holders and a standard mailbox post. Different instruction sheets are available for installing 4850A antique rural mailboxes on 2-wide, 4-wide or 5-wide spreaders with 4815A antique newspaper holders and a standard mailbox post. Other installation instructions are available for installing the mailboxes and spreaders with newspaper holders on a modern decorative mailbox post, mounting a single mailbox on a decorative or standard mailbox post, mounting a single newspaper holder, and mounting the post in a concrete footing.

When you install a curbside or roadside mailbox, make sure that it is easily accessible to the mail carrier. By regulation it should be 41" to 45" from the ground or street surface up to the inside floor of the mailbox. The door should be set back 6" to 8" back from the front face of the curb or the road edge. However, you should check with your local postmaster to ensure that the mailbox is installed according to local regulations.

Spreader and Newspaper Holders Installation to Standard Post

Attaching the spreader to the standard mailbox post requires simultaneously attaching the center newspaper holder to the spreader and to the standard mailbox post. Start by installing four (4) 5/16"-18 x 2" long pan head bolts provided with the post through the four (4) square holes shown in the inside floor of the center newspaper holder, through the four (4) center square holes in top of the spreader, and through the four (4) tapped holes on the top plate of the standard mailbox post. Insert a Phillips head screw driver through each square hole directly above, and in the top of the newspaper holder, to tighten the pan head bolts.

All hardware to attach the remaining two newspaper holders to the spreader is included with the spreader. To attach an additional newspaper holder, install four (4) 5/16"-18 x 1-3/4" long carriage bolts through the four (4) square holes shown in the inside floor of the newspaper holder and through the corresponding square holes in top of the spreader. Install 5/16" flat washers and 5/16"-18 hex nuts on the ends of the four (4) bolts protruding below the bottom of the spreader. Repeat these steps for the remaining newspaper holder.

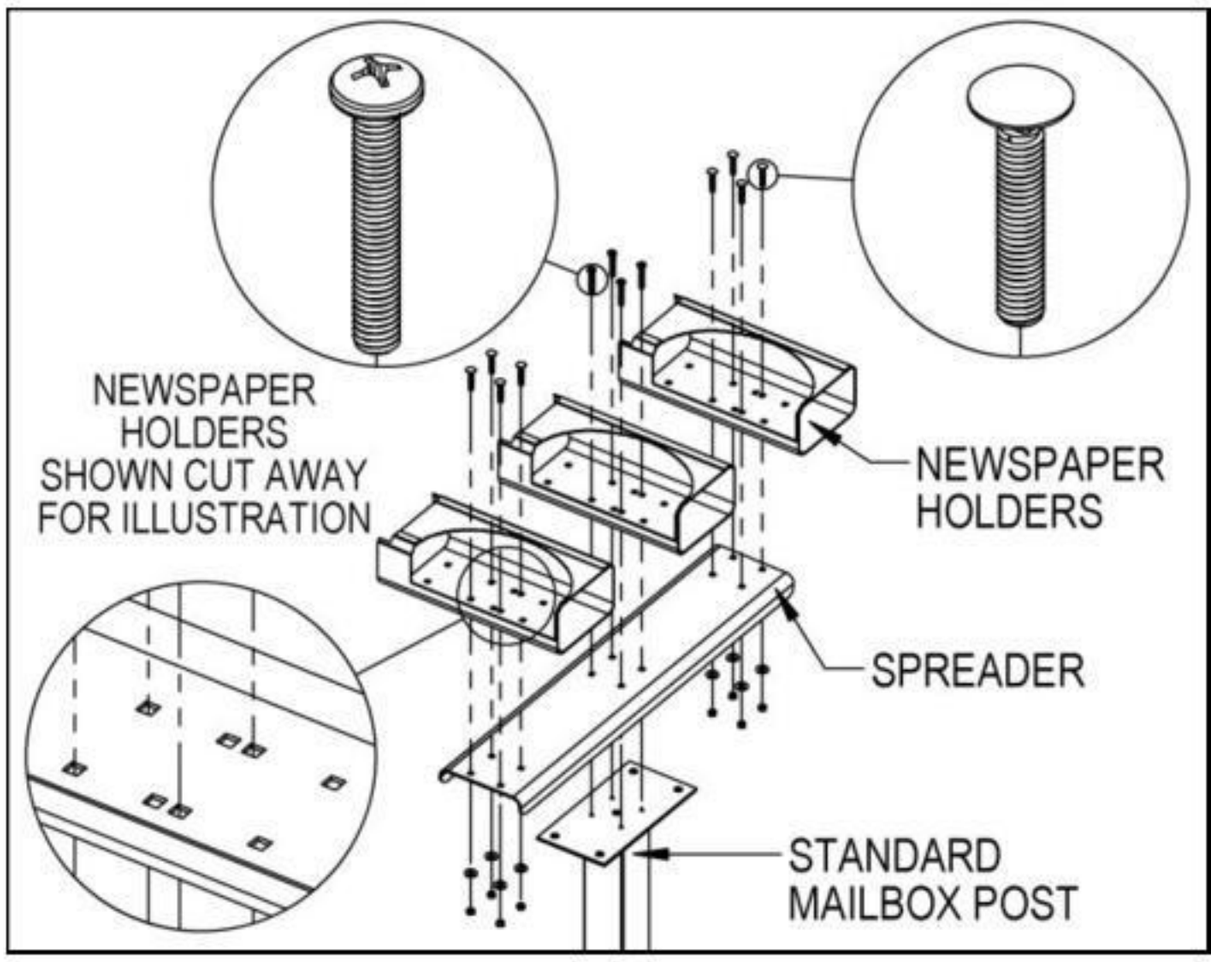

Mailbox Installation to Newspaper Holders

All hardware to attach the mailboxes to the newspaper holders is included with the newspaper holders. To attach a mailbox to a newspaper holder, install four (4) 5/16"-18 X 3/4" long carriage bolts into (4) square holes in the floor of the mailbox and through the four (4) square holes shown on the top of the newspaper holder. Install 5/16" flat washers and 5/16"-18 hex nuts on the ends of the four (4) bolts protruding below the top of the newspaper holder. Cover the hex nuts with cap plugs. Repeat these steps for the other mailboxes. Installation is now complete. Additional hardware provided is not needed and may be discarded.

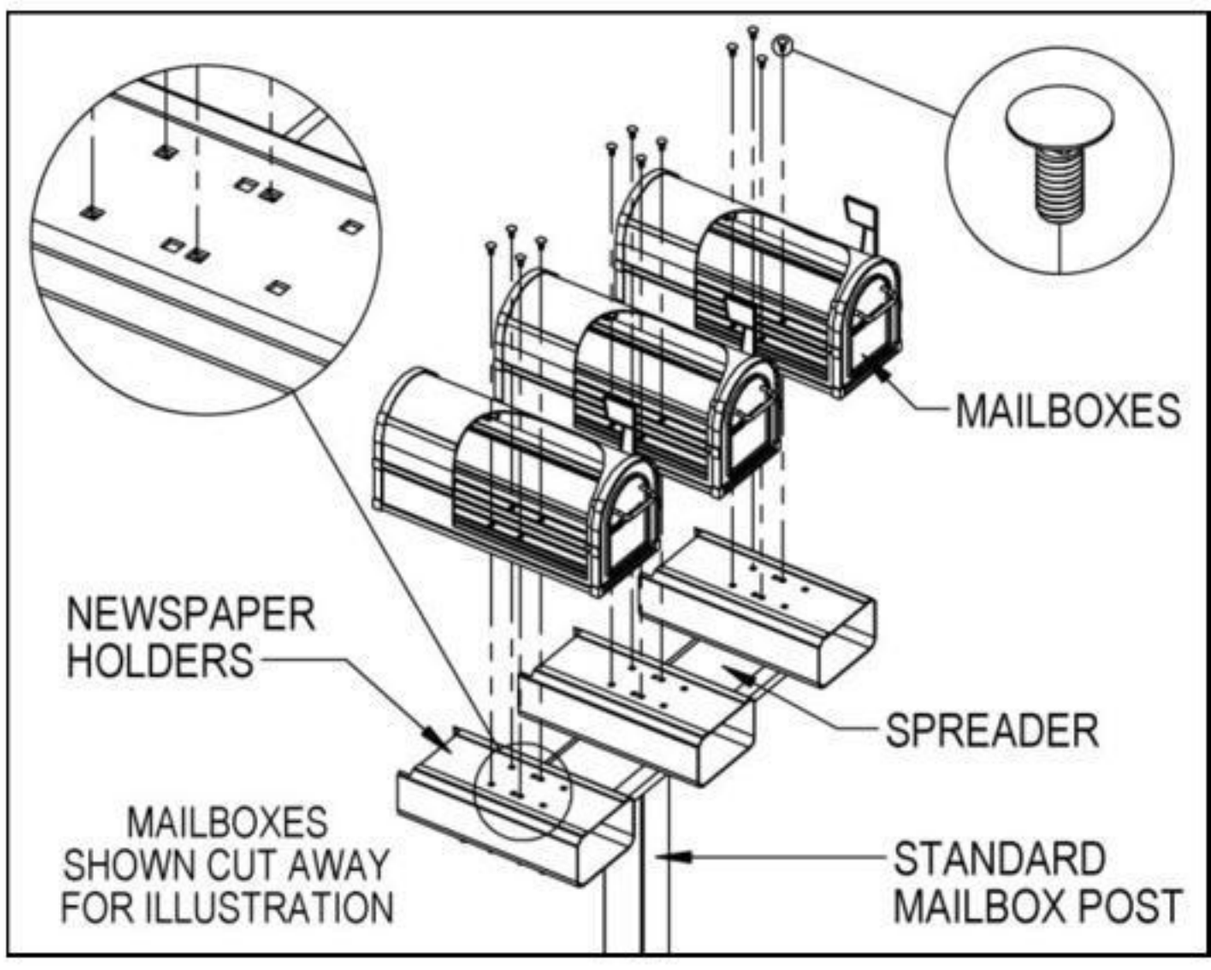

Antique Rural Mailboxes – 4850A
5-Wide Spreader with Antique Newspaper Holders on a Standard Mailbox Post Installation Instructions

U.S.P.S. APPROVED

Installing Mailboxes on Spreader with Newspaper Holders on a Standard Mailbox Post

Thank you for selecting Salsbury's 4850A antique rural mailbox.

This instruction sheet is for installing 4850A antique rural mailboxes on a 5-wide spreader with 4815A antique newspaper holders and a standard mailbox post. Different instruction sheets are available for installing 4850A antique rural mailboxes on 2-wide, 3-wide or 4-wide spreaders with 4815A antique newspaper holders and a standard mailbox post. Other installation instructions are available for installing the mailboxes and spreaders with newspaper holders on a modern decorative mailbox post, mounting a single mailbox on a decorative or standard mailbox post, mounting a single newspaper holder, and mounting the post in a concrete footing.

When you install a curbside or roadside mailbox, make sure that it is easily accessible to the mail carrier. By regulation it should be 41" to 45" from the ground or street surface up to the inside floor of the mailbox. The door should be set back 6" to 8" back from the front face of the curb or the road edge. However, you should check with your local postmaster to ensure that the mailbox is installed according to local regulations.

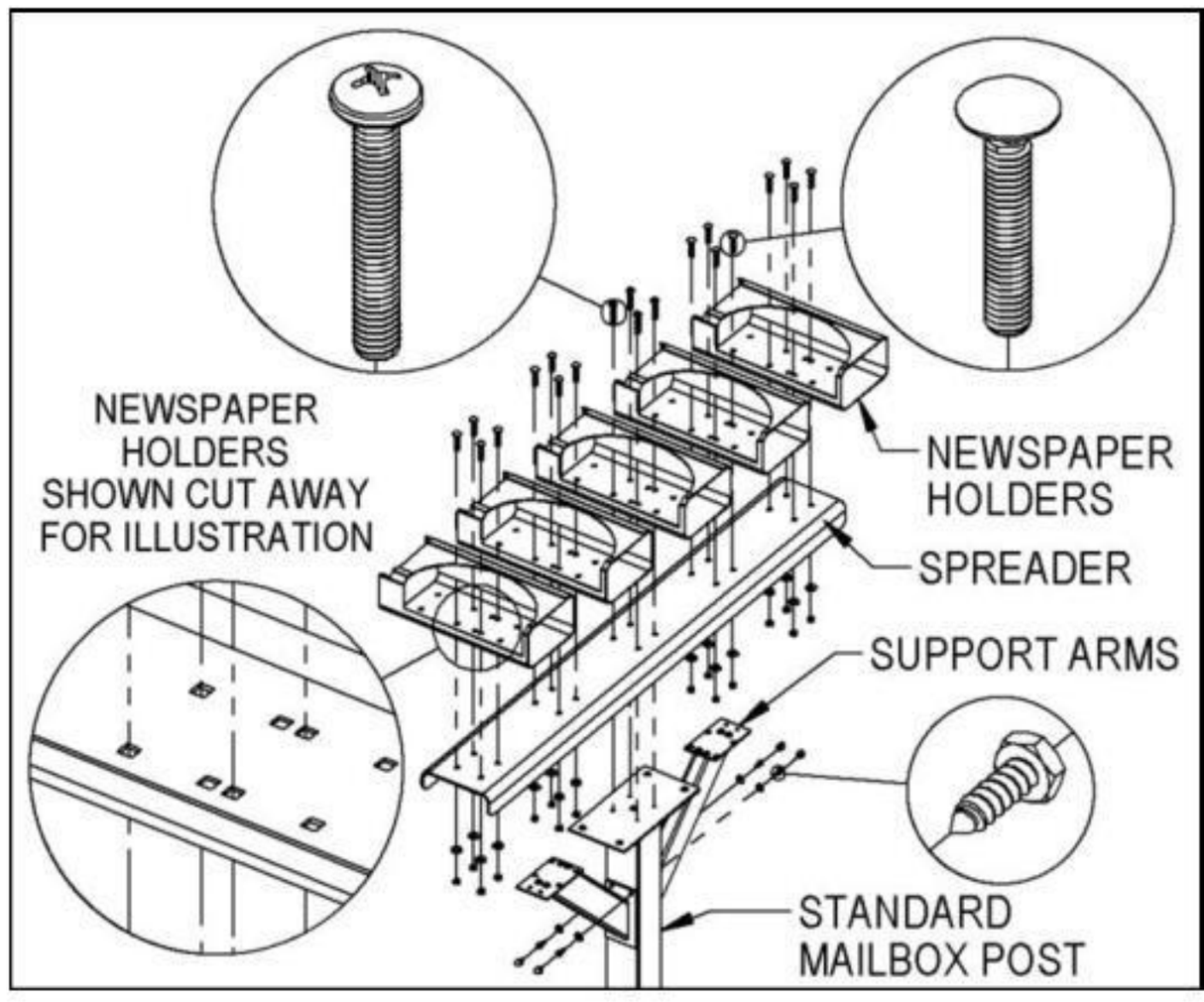

Spreader and Newspaper Holders Installation to Standard Post

Attaching the spreader to the standard mailbox post requires simultaneously attaching the center newspaper holder to the spreader and to the standard mailbox post. Start by installing four (4) 5/16"-18 x 2" long pan head bolts provided with the post through the four (4) square holes shown in the inside floor of the center newspaper holder, through the four (4) center square holes in top of the spreader, and through the four (4) tapped holes on the top plate of the standard mailbox post. Insert a Phillips head screw driver through each square hole directly above, and in the top of the newspaper holder, to tighten the pan head bolts.

All hardware to attach the remaining four newspaper holders to the spreader is included with the spreader. Next attach an additional newspaper holder adjacent to the center newspaper holder. Install four (4) 5/16"-18 x 1-3/4" long carriage bolts through the four (4) square holes shown in the inside floor of the newspaper holder, through the corresponding square holes in top of the spreader and through the corresponding square holes in the top plate of a support arm (supplied with spreader). Install 5/16" flat washers and 5/16"-18 hex nuts on the ends of the four (4) bolts protruding below the bottom of the support arm. Complete the installation of the support arm by drilling a 3/16" diameter hole though each hole in the vertical plate of the support arm and through the post. Install 1/4" flat washers and 1/4" x 1" long lag screws into the post. Cover the lag screws with cap plugs. Repeat these steps for the other newspaper holder adjacent to the center mailbox.

To install an outermost newspaper holder, install four (4) 5/16"-18 x 1-3/4" long carriage bolts through the four (4) square holes shown in the inside floor of the newspaper holder and through the corresponding square holes in top of the spreader. Install 5/16" flat washers and 5/16"-18 hex nuts on the ends of the four (4) bolts protruding below the bottom of the spreader. Repeat these steps for the remaining newspaper holder.

Mailbox Installation to Newspaper Holders

All hardware to attach the mailboxes to the newspaper holders is included with the newspaper holders. To attach a mailbox to a newspaper holder, install four (4) 5/16"-18 X 3/4" long carriage bolts into (4) square holes in the floor of the mailbox and through the four (4) square holes shown on the top of the newspaper holder. Install 5/16" flat washers and 5/16"-18 hex nuts on the ends of the four (4) bolts protruding below the top of the newspaper holder. Cover the hex nuts with cap plugs. Repeat these steps for the other mailboxes. Installation is now complete. Additional hardware provided is not needed and may be discarded.

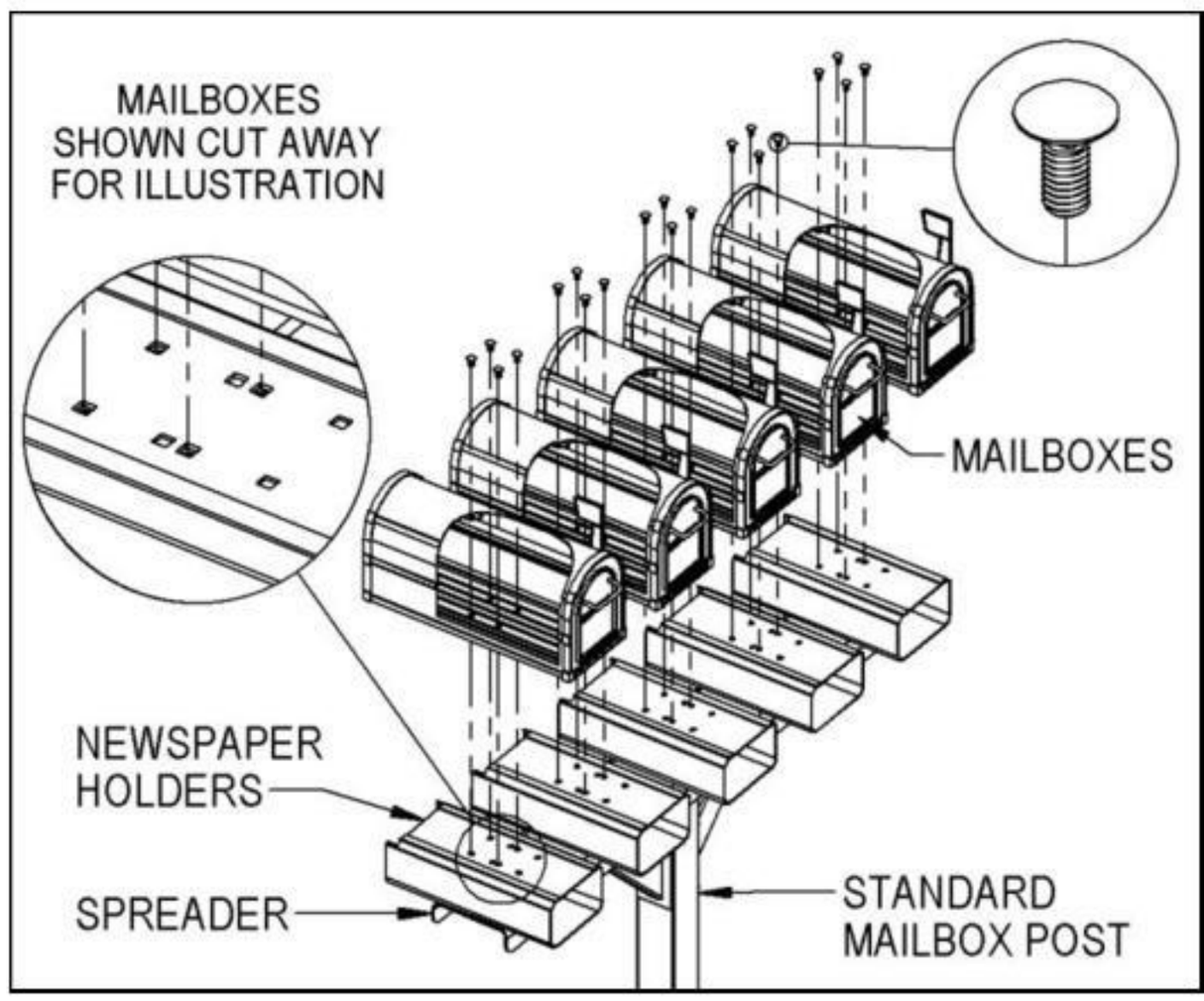

Antique Rural Mailboxes – 4850A
2-Wide Spreader with Antique Newspaper Holders on a Modern Decorative Mailbox Post Installation Instructions

U.S.P.S. APPROVED

Installing Mailboxes on a 2-Wide Spreader with Newspaper Holders on a Modern Decorative Mailbox Post

Thank you for selecting Salsbury's 4850A antique rural mailbox.

This instruction sheet is for installing 4850A antique rural mailboxes on a 2-wide spreader with 4815A antique newspaper holders and a modern decorative mailbox post. A different instruction sheet is available for installing 4850A antique rural mailboxes on a 3-wide spreader with 4815A antique newspaper holders and a modern decorative mailbox post. Other installation instructions are available for installing the mailboxes and spreaders with newspaper holders on a standard mailbox post, mounting a single mailbox on a decorative or standard mailbox post, mounting a single newspaper holder, and mounting the post in a concrete footing.

When you install a curbside or roadside mailbox, make sure that it is easily accessible to the mail carrier. By regulation it should be 41" to 45" from the ground or street surface up to the inside floor of the mailbox. The door should be set back 6" to 8" back from the front face of the curb or the road edge. However, you should check with your local postmaster to ensure that the mailbox is installed according to local regulations.

Spreader Installation to Modern Decorative Mailbox Post

All hardware to attach the spreader to the modern decorative post is included with the post. To attach the spreader to the modern decorative mailbox post, install four (4) 5/16"-18 X 2-3/4" long hex flange head bolts through the four (4) center square holes of the spreader, through the square spacer and through the four (4) square holes in the top plate of the modern decorative post arm. Install 5/16" flat washers and 5/16"-18 hex nuts on the ends of the four (4) bolts protruding below the bottom of the modern decorative post arm. Cover the hex flange head bolts and nuts with cap plugs.

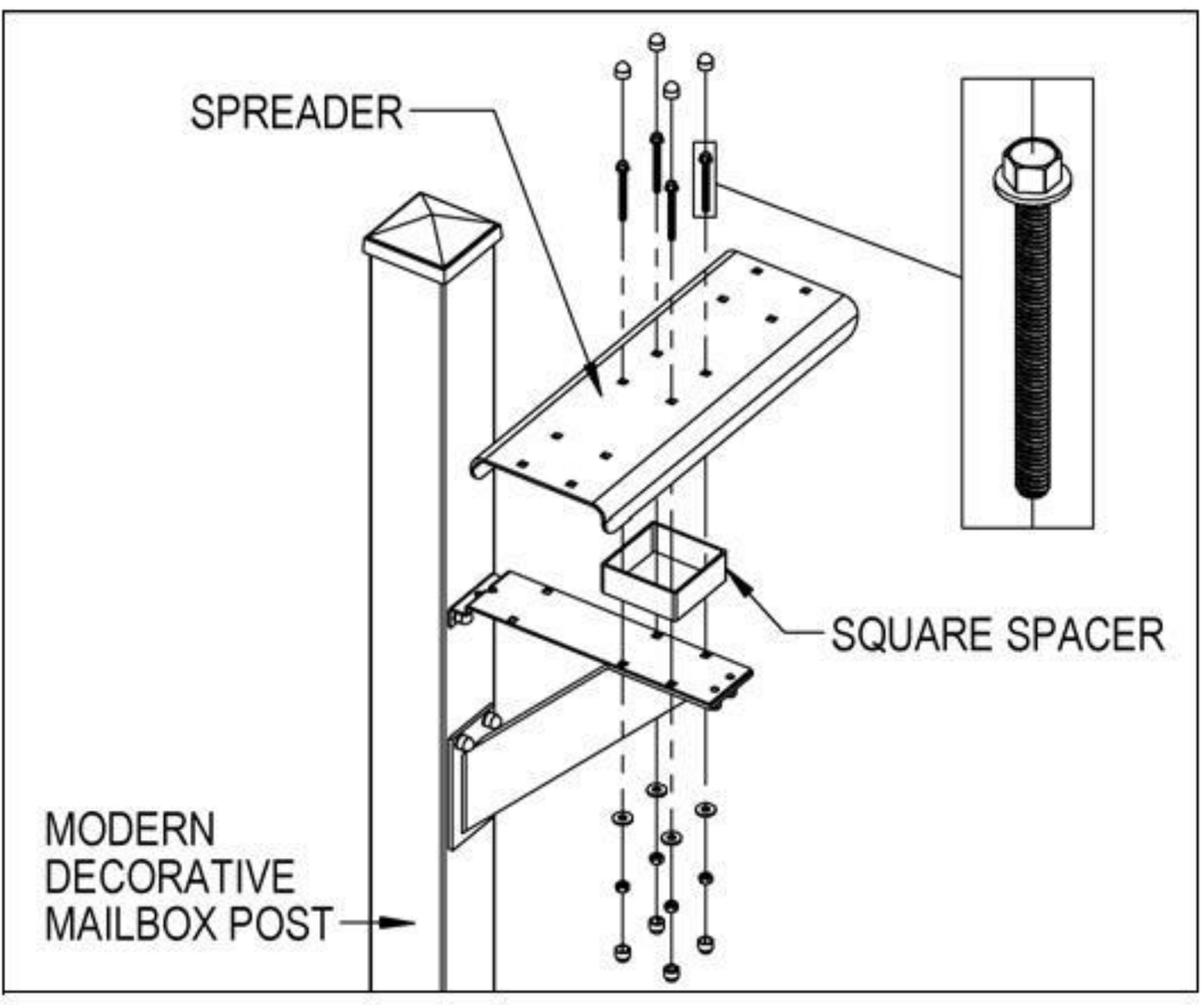

Newspaper Holders Installation to Spreader

All hardware to attach the newspaper holders to the spreader is included with the spreader. To attach a newspaper holder to the spreader, install four (4) 5/16"-18 x 1-3/4" long carriage bolts through the four (4) square holes shown in the inside floor of the newspaper holder and through the four (4) corresponding holes on the spreader. Install 5/16" flat washers and 5/16"-18 hex nuts on the ends of the four (4) bolts protruding below the bottom of the spreader. Repeat these steps for the other newspaper holder.

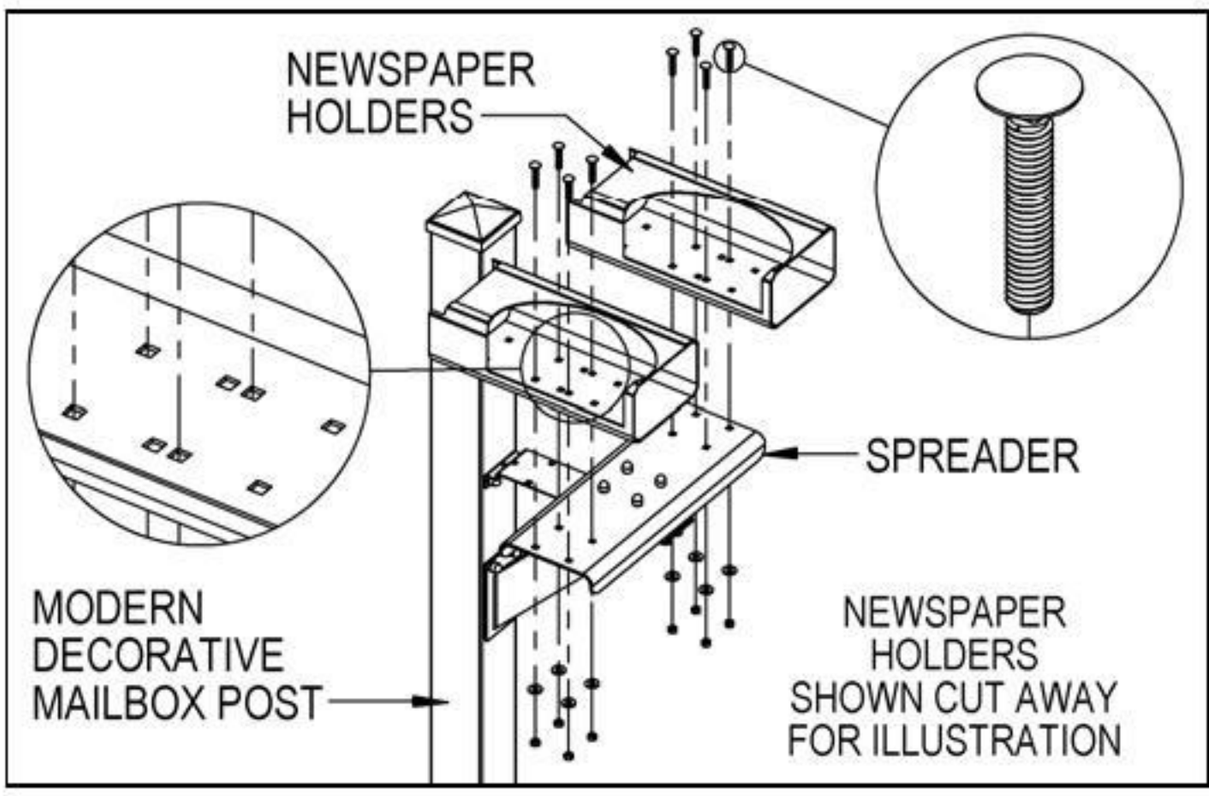

Mailbox Installation to Newspaper Holders

All hardware to attach the mailboxes to the newspaper holders is included with the newspaper holders. To attach a mailbox to a newspaper holder, install four (4) 5/16"-18 X 3/4" long carriage bolts into (4) square holes in the floor of the mailbox and through the four (4) square holes shown on the top of the newspaper holder. Install 5/16" flat washers and 5/16"-18 hex nuts on the ends of the four (4) bolts protruding below the top of the newspaper holder. Cover the hex nuts with cap plugs. Repeat these steps for the other mailbox. Installation is now complete. Additional hardware provided is not needed and may be discarded.

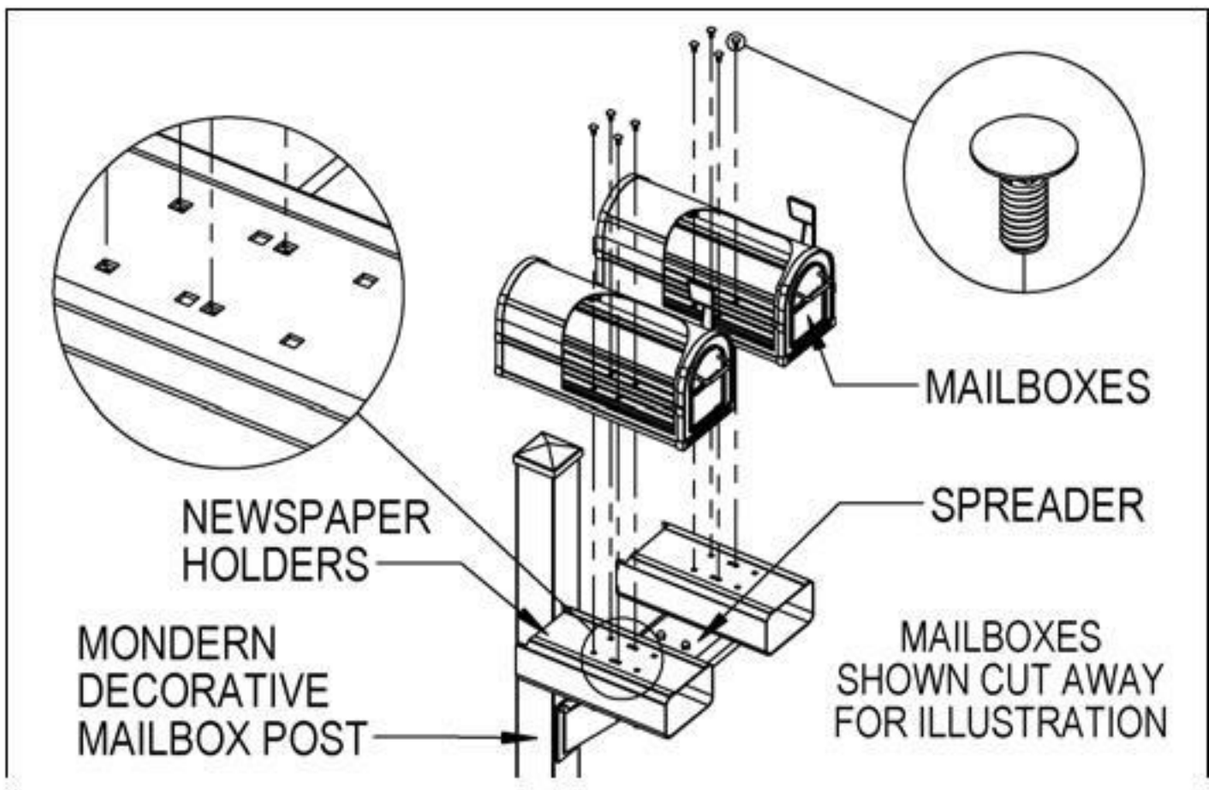

Antique Rural Mailboxes – 4850A
3-Wide Spreader with Antique Newspaper Holders on a Modern Decorative Mailbox Post Installation Instructions

U.S.P.S. APPROVED

Installing Mailboxes on Spreader with Newspaper Holders on a Modern Decorative Mailbox Post

Thank you for selecting Salsbury's 4850A antique rural mailbox.

This instruction sheet is for installing 4850A antique rural mailboxes on a 3-wide spreader with 4815A antique newspaper holders and a modern decorative mailbox post. A different instruction sheet is available for installing 4850A antique rural mailboxes on 2-wide spreaders with 4815A antique newspaper holders and a modern decorative mailbox post. Other installation instructions are available for installing the mailboxes and spreaders with newspaper holders on a modern decorative post, mounting a single mailbox on a decorative or standard post, mounting a single newspaper holder, and mounting the post in a concrete footing.

When you install a curbside or roadside mailbox, make sure that it is easily accessible to the mail carrier. By regulation it should be 41" to 45" from the ground or street surface up to the inside floor of the mailbox. The door should be set back 6" to 8" back from the front face of the curb or the road edge. However, you should check with your local postmaster to ensure that the mailbox is installed according to local regulations.

Spreader and Newspaper Holders Installation to Modern Decorative Mailbox Post

All hardware to attach the spreader to the modern decorative mailbox post is included with the post. Attaching the spreader to the modern decorative mailbox post requires simultaneously attaching the center newspaper holder to the spreader and to the modern decorative mailbox post. Start by installing four (4) 5/16"-18 x 3" long carriage bolts through the four (4) square holes shown in the inside floor of the center newspaper holder, through the four (4) center square holes in top of the spreader, through the square spacer and through the four (4) square holes in the top plate of the modern decorative mailbox post arm. Install 5/16" flat washers and 5/16"-18 hex nuts on the ends of the four (4) bolts protruding below the bottom of the top plate on the modern decorative mailbox post arm.

All hardware to attach the remaining two newspaper holders to the spreader is included with the spreader. To attach an additional newspaper holder, install four (4) 5/16"-18 x 1-3/4" long carriage bolts through the four (4) square holes shown in the inside floor of the newspaper holder and through the corresponding square holes in top of the spreader. Install 5/16" flat washers and 5/16"-18 hex nuts on the ends of the four (4) bolts protruding below the bottom of the spreader. Repeat these steps for the remaining newspaper holder.

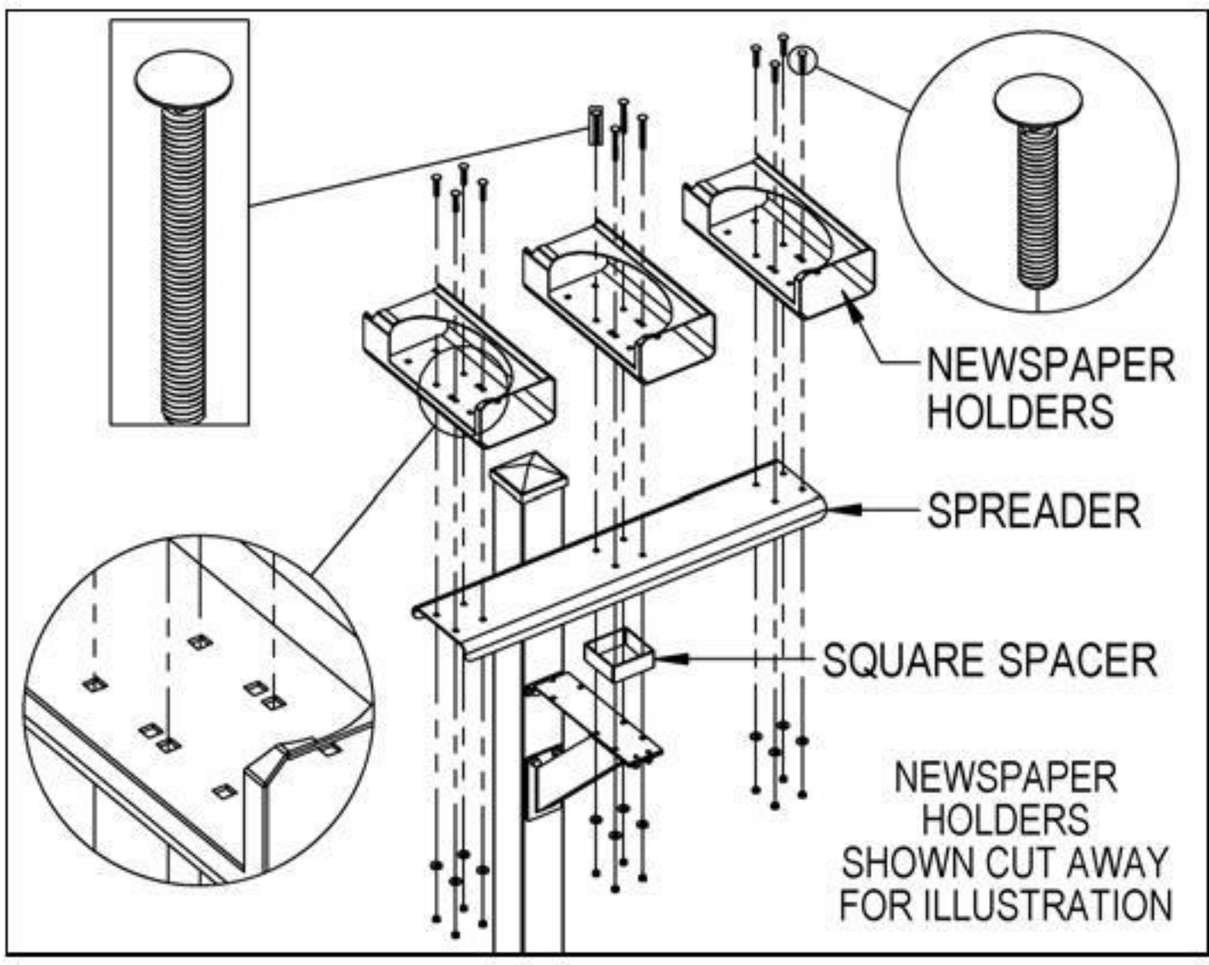

Mailbox Installation to Newspaper Holders

All hardware to attach the mailboxes to the newspaper holders is included with the newspaper holders. To attach a mailbox to a newspaper holder, install four (4) 5/16"-18 X 3/4" long carriage bolts into (4) square holes in the floor of the mailbox and through the four (4) square holes shown on the top of the newspaper holder. Install 5/16" flat washers and 5/16"-18 hex nuts on the ends of the four (4) bolts protruding below the top of the newspaper holder. Cover the hex nuts with cap plugs. Repeat these steps for the other mailboxes. Installation is now complete. Additional hardware provided is not needed and may be discarded.

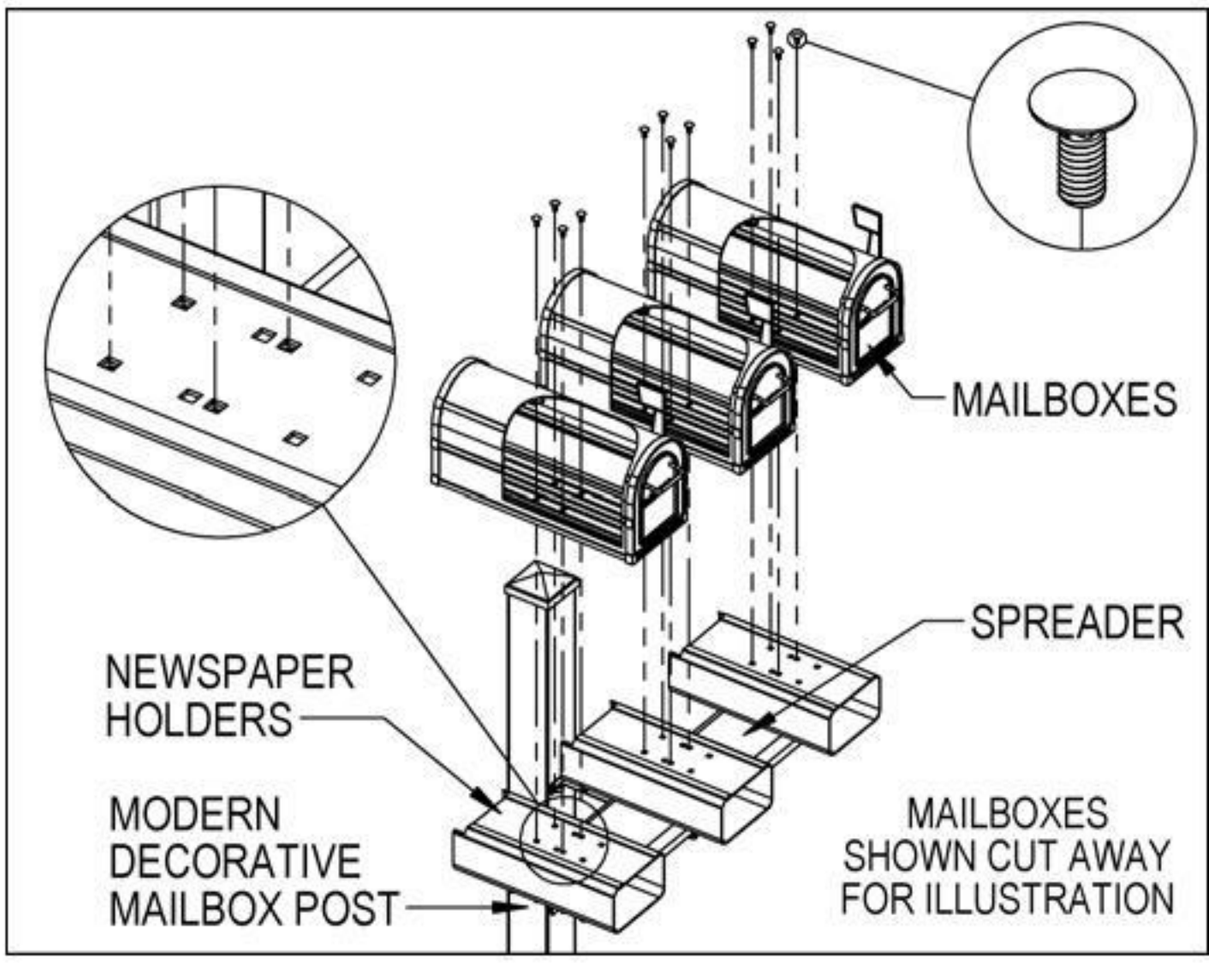

Antique Rural Mailboxes – 4850A
In-Ground Mounted Mailbox Post Installation Instructions

U.S.P.S. APPROVED

Installing the In-Ground Mounted Mailbox Post

When you install a curbside or rural mailbox, make sure that it is easily accessible to the mail carrier. By regulation it should be 41" to 45" from the ground or street surface up to the inside floor of the mailbox. The door should be set back 6" to 8" back from the front face of the curb or the road edge. However, you should check with your local postmaster to ensure that the mailbox is installed according to local regulations.

To install the in-ground mounted mailbox post, begin by digging a hole for the concrete footing and then prepare the concrete. The top surface of the footing should be about 12" by 18". See the illustration for the relative position of the rectangular footing to the post and mailbox. The concrete should extend into the ground 24" or greater if your local frost line is deeper. Installing the concrete below the frost line will prevent movement during ground freezing and thawing. The bottom of the hole for the concrete footing should be filled with a depth of about 6" of gravel to promote drainage under the post. The top of the footing should be sloped for water runoff.

When digging the hole for the footing, be careful to not puncture water, sewer, or gas lines.

After digging the hole, set the post in the hole and fill the hole with the prepared concrete mix. Prod the mix with a stick while filling to reduce any air pockets. If you want to conceal the concrete, pour it to within a few inches of the top of the hole and cover with soil after the concrete has set. Use a carpenter's level on the sides of the post to ensure that the post is aligned vertically. Periodically check the vertical alignment of the post as the concrete is curing.

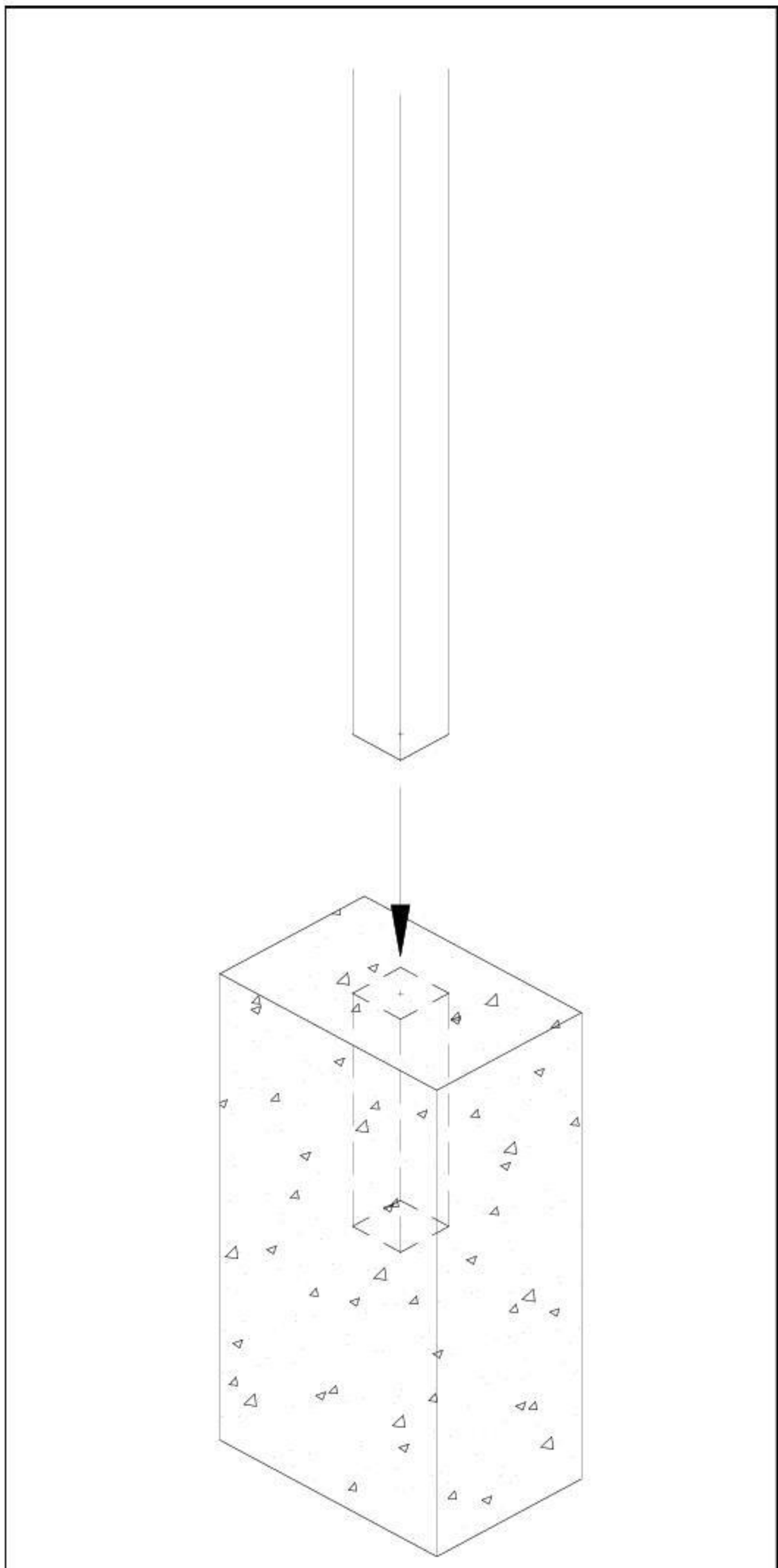

Antique Rural Mailboxes – 4850A
Bolt Mounted Mailbox Post Installation Instructions

U.S.P.S. APPROVED

Installing the Bolt Mounted Mailbox Post

When you install a curbside or rural mailbox, make sure that it is easily accessible to the mail carrier. By regulation it should be 41" to 45" from the ground or street surface up to the inside floor of the mailbox. The door should be set back 6" to 8" back from the front face of the curb or the road edge. However, you should check with your local postmaster to ensure that the mailbox is installed according to local regulations.

To install the bolt mounted mailbox post, begin by digging a hole for the concrete footing and then prepare the concrete. The top surface of the footing should be about 12" by 18". See the illustration for the relative position of the rectangular footing to the post and mailbox. The concrete should extend into the ground 24" or greater if your local frost line is deeper. Installing the concrete below the frost line will prevent movement during ground freezing and thawing. The bottom of the hole for the concrete footing should be filled with a depth of about 6" of gravel to promote drainage under the post. The top of the footing should be sloped for water runoff.

When digging the hole for the footing, be careful to not puncture water, sewer, or gas lines.

Hardware for attaching the pedestal to the concrete footing is not included. J-bolts are shown in the illustration as an example. The concrete footing should include reinforcing steel and four (4) 1/2" anchor studs protruding at least 1" above the concrete surface. Place the anchor studs in a 4" x 10" pattern in the concrete to align with the holes in the pedestal base.

When the concrete has cured sufficiently, install four (4) leveling nuts on the anchor studs. Set the pedestal on the leveling nuts with the four (4) anchor studs protruding through the holes in the pedestal base plate. Adjust the leveling nuts to square up the pedestal. Install four (4) nuts and washers on the anchor studs and tighten securely.

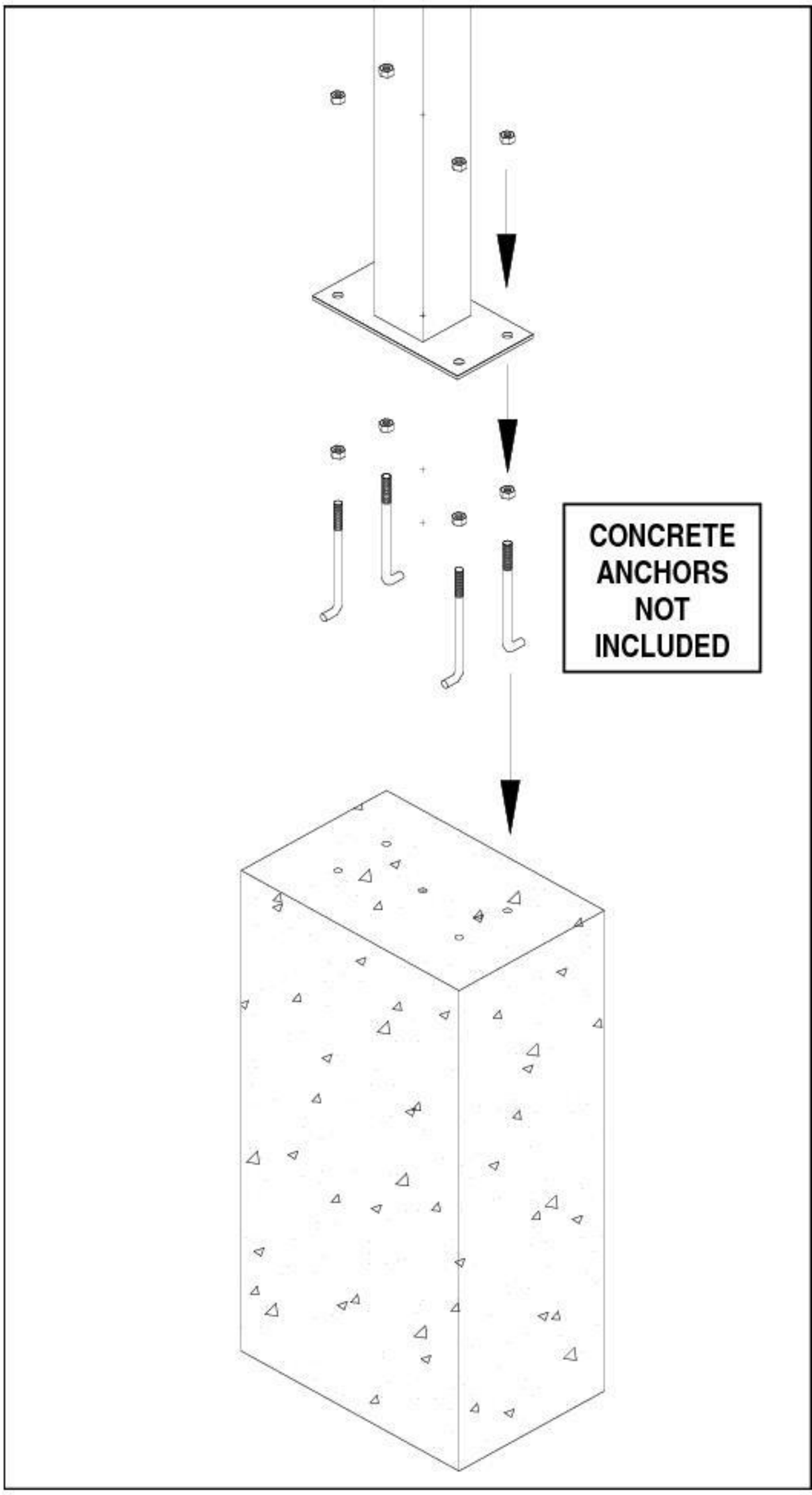

Antique Rural Mailboxes – 4850A

Decorative Mailbox Post Installation Instructions

U.S.P.S. APPROVED

Installing Mailbox on a Decorative Mailbox Post

Thank you for selecting Salsbury's 4850A antique rural mailbox.

This instruction sheet is for installing the 4850A mailbox on a decorative mailbox post. Other installation instructions are available for installing the mailboxes on a standard mailbox post or on a deluxe mailbox post, installing the mailbox on spreaders, mounting a newspaper holder, and mounting the post in a concrete footing.

When you install a curbside or roadside mailbox, make sure that it is easily accessible to the mail carrier. By regulation it should be 41" to 45" from the ground or street surface up to the inside floor of the mailbox. The door should be set back 6" to 8" back from the front face of the curb or the road edge. However, you should check with your local postmaster to ensure that the mailbox is installed according to local regulations.

All hardware to install the mailbox is provided with the post. To install the mailbox, set the mailbox on the decorative mailbox post mounting plate, open the front door of the mailbox and install six (6) 5/16"-18 X 3/4" long carriage bolts into the six (6) square holes in the floor of the mailbox and through the six (6) square holes on the decorative mailbox post mounting plate. Install 5/16" flat washers and 5/16"-18 hex nuts on the ends of the six (6) bolts protruding below the bottom of the decorative mailbox post mounting plate. Cover the hex nuts with cap plugs.

Additional hardware provided is not needed and may be discarded.

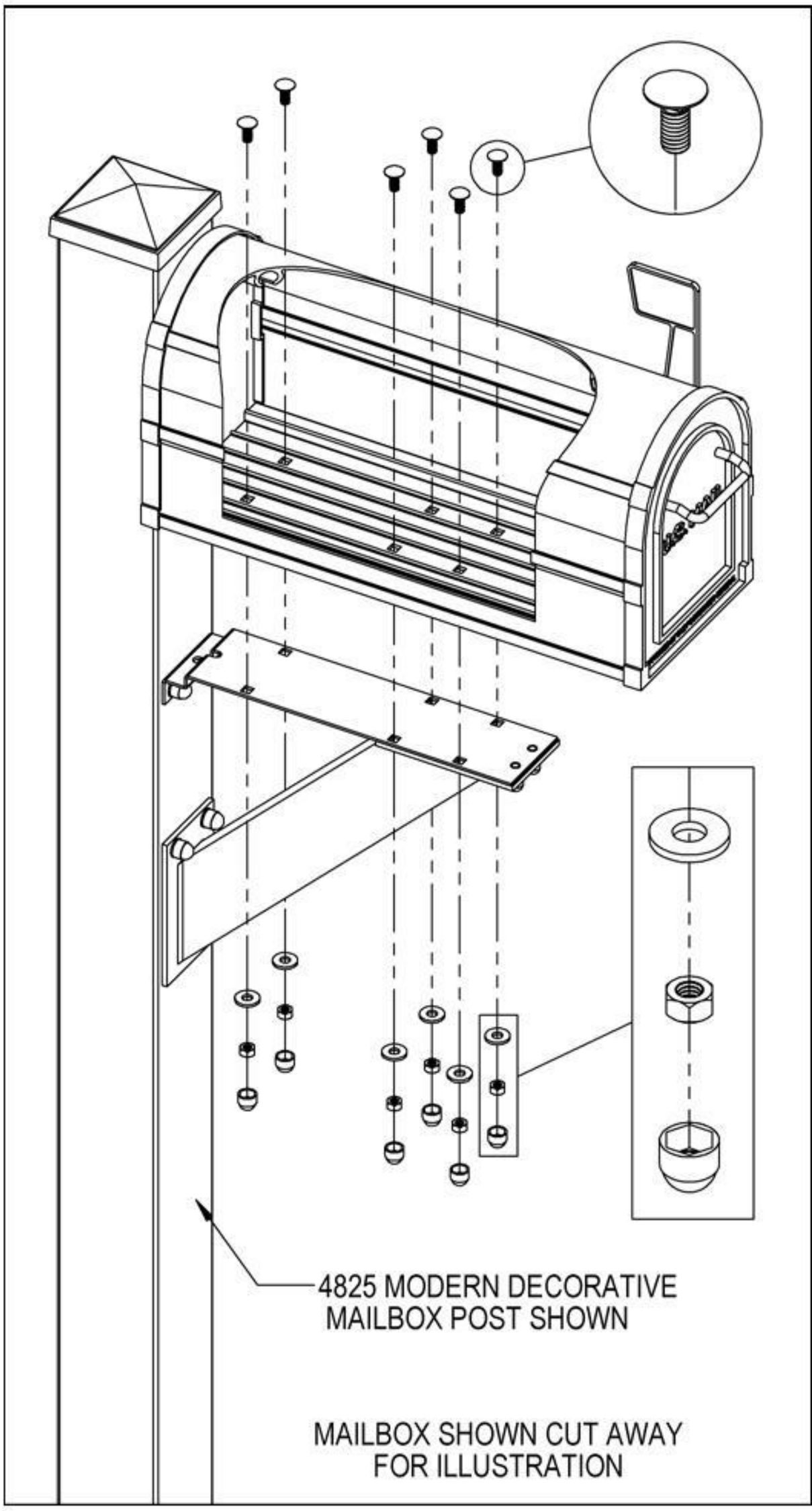

Antique Rural Mailboxes – 4850A

Deluxe Mailbox Post Installation Instructions

U.S.P.S. APPROVED

Thank you for selecting Salsbury Industries 4850A antique rural mailbox. This instruction sheet is for installing the 4850A antique rural mailbox on a Salsbury deluxe mailbox post. A different instruction sheet is available for installing mailboxes on a bridge style deluxe mailbox post. Other installation instructions are available for installing the mailboxes on a standard mailbox post or on a decorative mailbox post, installing the mailbox on spreaders, mounting a newspaper holder, and mounting the post in a concrete footing.

When you install a curbside or roadside mailbox, make sure that it is easily accessible to the mail carrier. By regulation it should be 41" to 45" from the ground or street surface up to the inside floor of the mailbox. The door should be set back 6" to 8" from the front face of the curb or the road edge. However, you should check with your local postmaster to ensure that the mailbox is installed according to local regulations.

All hardware required to assemble the mailbox(es) to the deluxe mailbox post is provided with the post. Each mailbox requires four (4) 5/16"-18 x 2" long pan head bolts and four (4) 5/8" nylon spacers to attach to the post arm(s). The 5/8" nylon spacers are placed between the bottom surface of the mailbox and the top surface of the post arm. Open the front door of the mailbox and install the four (4) 5/16"-18 x 2" long pan head bolts through the four (4) square holes in the inside floor of the mailbox, through the four (4) 5/8" nylon spacers (thread onto bolt), and into the four (4) tapped holes in the arm of the deluxe mailbox post. Additional hardware provided is not needed and may be discarded.

4870 Deluxe Mailbox Post

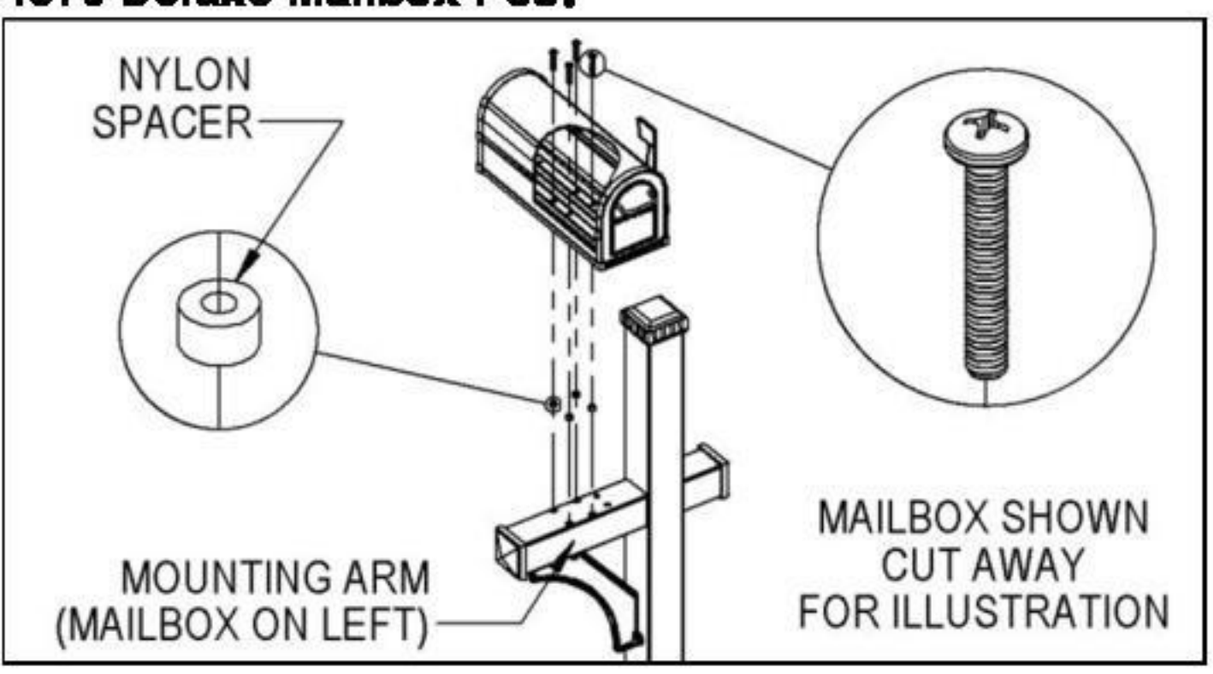

Note: On the 4870 deluxe mailbox post, the longer mounting arm which accommodates the mailbox can be on either the left or right side. When attaching the post to the ground, position the post so the longer mounting arm is on the side desired. Then mount the mailbox on the mounting arm with the mailbox facing the street or roadway.

4873 Deluxe Mailbox Post

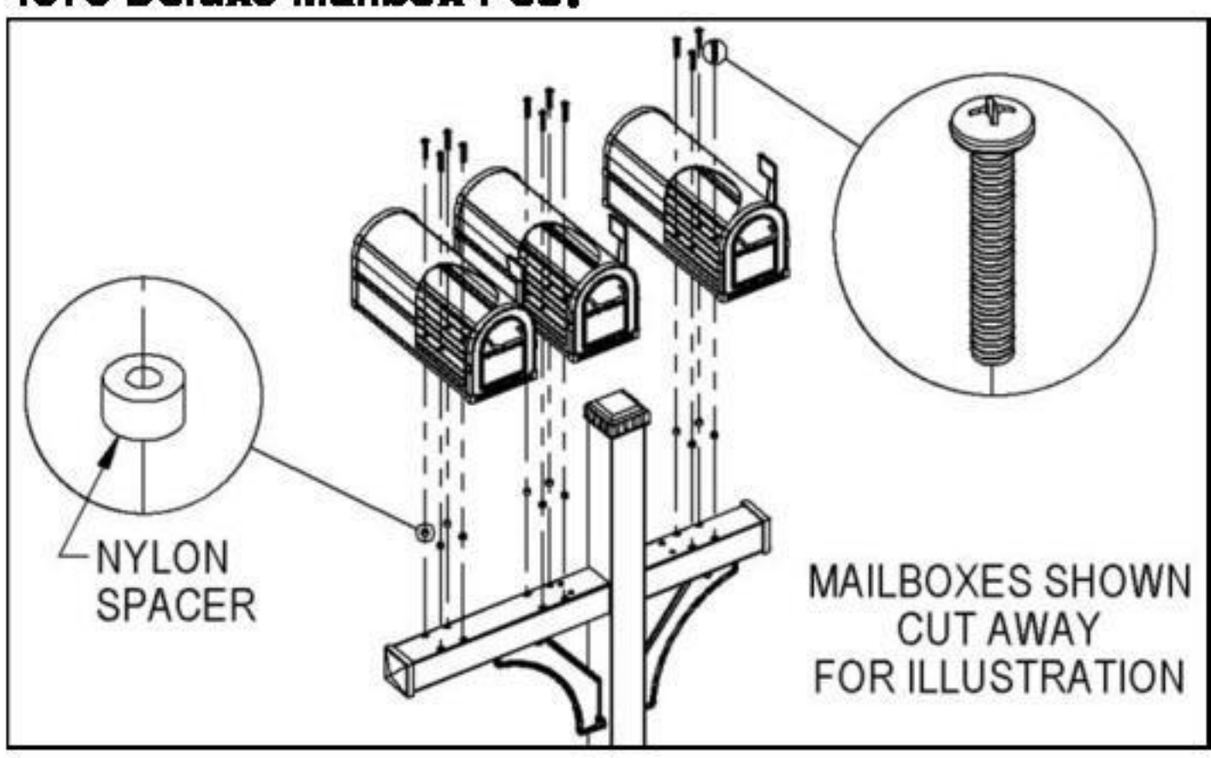

Note: On the 4873 deluxe mailbox post, the mounting arms can be positioned on either side of the vertical post.

4872 Deluxe Mailbox Post

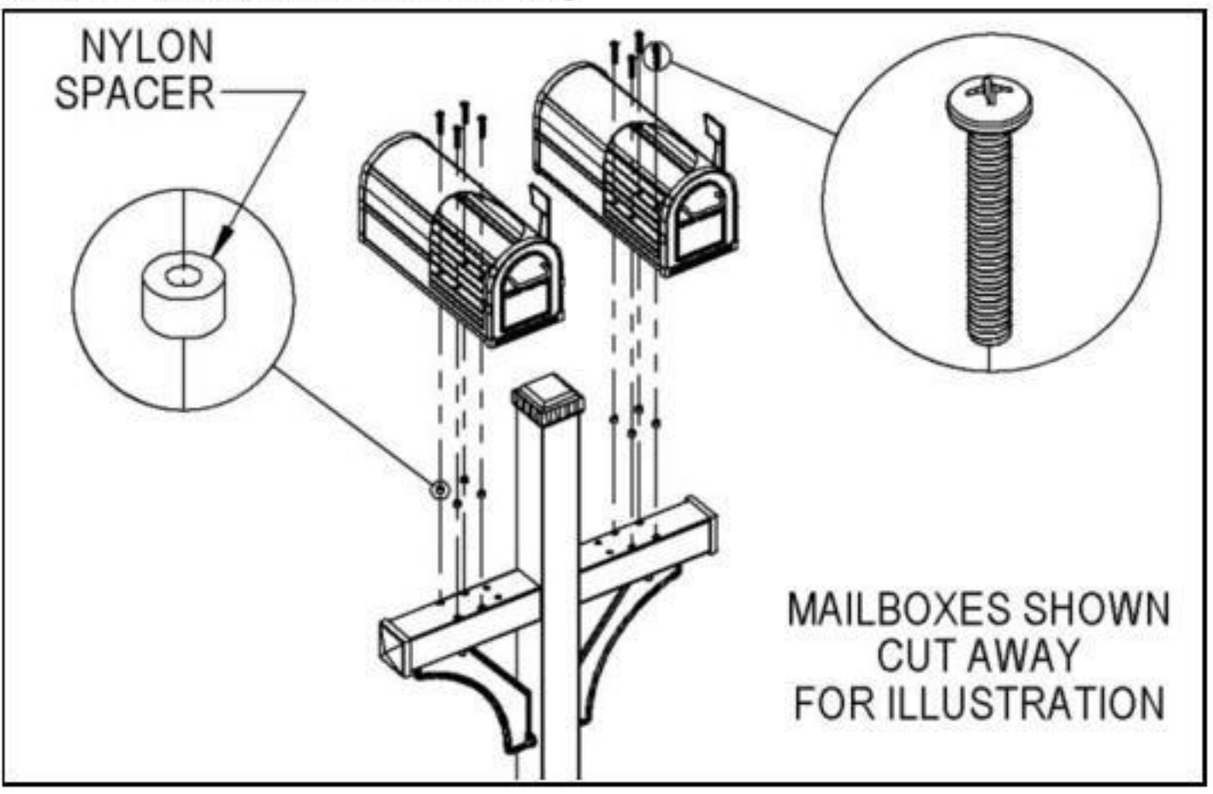

4874 Deluxe Mailbox Post

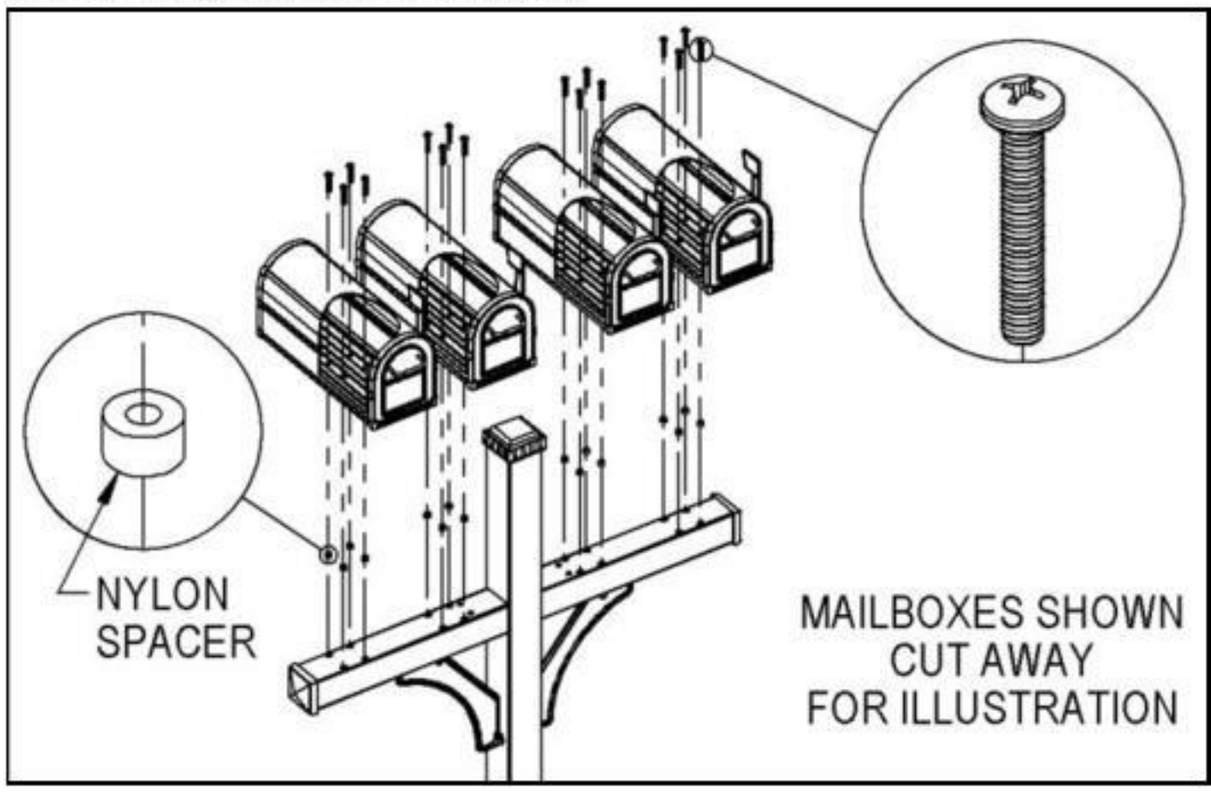

Antique Rural Mailboxes – 4850A

Deluxe Bridge Style Mailbox Post
Installation Instructions

U.S.P.S. APPROVED

Thank you for selecting Salsbury Industries 4850A antique rural mailbox. This instruction sheet is for installing the 4850A antique rural mailbox on a Salsbury deluxe bridge style mailbox post. A different instruction sheet is available for installing mailboxes on other deluxe mailbox posts. Additional installation instructions are available for installing the mailboxes on a standard mailbox post or on a decorative mailbox post, installing the mailbox on spreaders, mounting a newspaper holder, and mounting the post in a concrete footing.

When you install a curbside or roadside mailbox, make sure that it is easily accessible to the mail carrier. By regulation it should be 41" to 45" from the ground or street surface up to the inside floor of the mailbox. The door should be set back 6" to 8" from the front face of the curb or the road edge. However, you should check with your local postmaster to ensure that the mailbox is installed according to local regulations.

All hardware required to assemble the mailboxes to the deluxe bridge style mailbox post is provided with the post. Each mailbox requires four (4) 5/16"-18 x 2" long pan head bolts and four (4) 5/8" nylon spacers to attach to the post arms. The 5/8" nylon spacers are placed between the bottom surface of the mailbox and the top surface of the post arms. Open the front door of the mailbox and install the four (4) 5/16"-18 x 2" long pan head bolts through the four (4) square holes in the inside floor of the mailbox, through the four (4) 5/8" nylon spacers (thread onto bolt), and into the four (4) tapped holes in the arm of the deluxe mailbox post. Additional hardware provided is not needed and may be discarded.

4875 Deluxe Bridge Style Mailbox Post

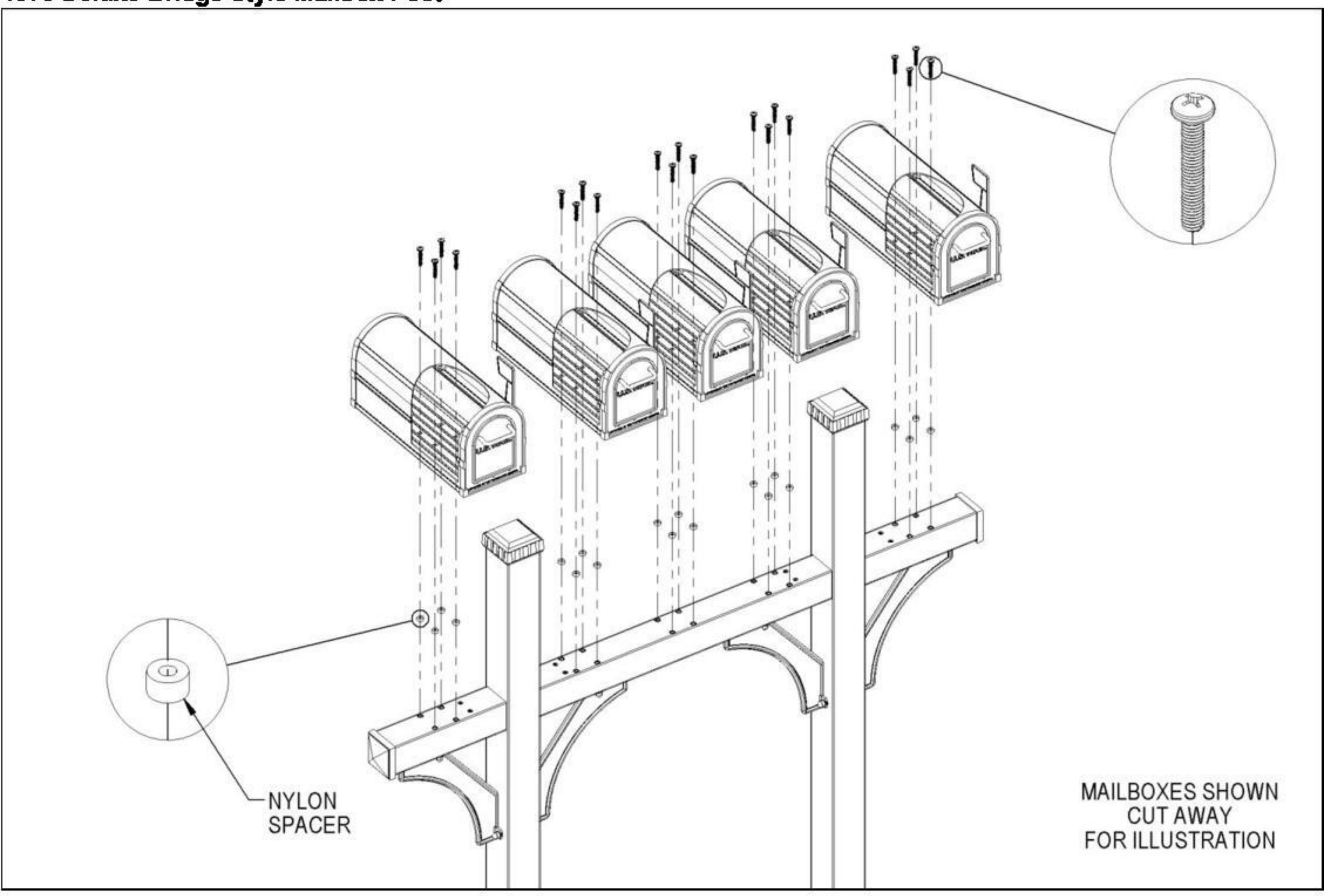

Antique Rural Mailboxes – 4850A

Antique Newspaper Holder on Standard or Decorative Mailbox Post Installation Instructions

U.S.P.S. APPROVED

Thank you for selecting Salsbury's 4850A antique rural mailbox. This instruction sheet is for installing the 4850A antique rural mailbox along with a 4815A antique newspaper holder on a standard or decorative mailbox post. Other installation instructions are available for installing the mailbox on a standard mailbox post, or on a decorative mailbox post, installing the mailbox on spreaders, and installing the post in a concrete footing.

When you install a curbside or roadside mailbox, make sure that it is easily accessible to the mail carrier. By regulation it should be 41" to 45" from the ground or street surface up to the inside floor of the mailbox. The door should be set back 6" to 8" back from the front face of the curb or the road edge. However, you should check with your local postmaster to ensure that the mailbox is installed according to local regulations.

Newspaper Holder to Standard Mailbox Post Installation

Install four (4) 5/16"-18 x 2" long pan head bolts provided with the post through the four (4) square holes shown in the inside floor of the newspaper holder and through the four (4) tapped holes on the top plate of the standard mailbox post. Insert a Phillips head screw driver through each square hole directly above, and in the top of the newspaper holder, to tighten the pan head bolts.

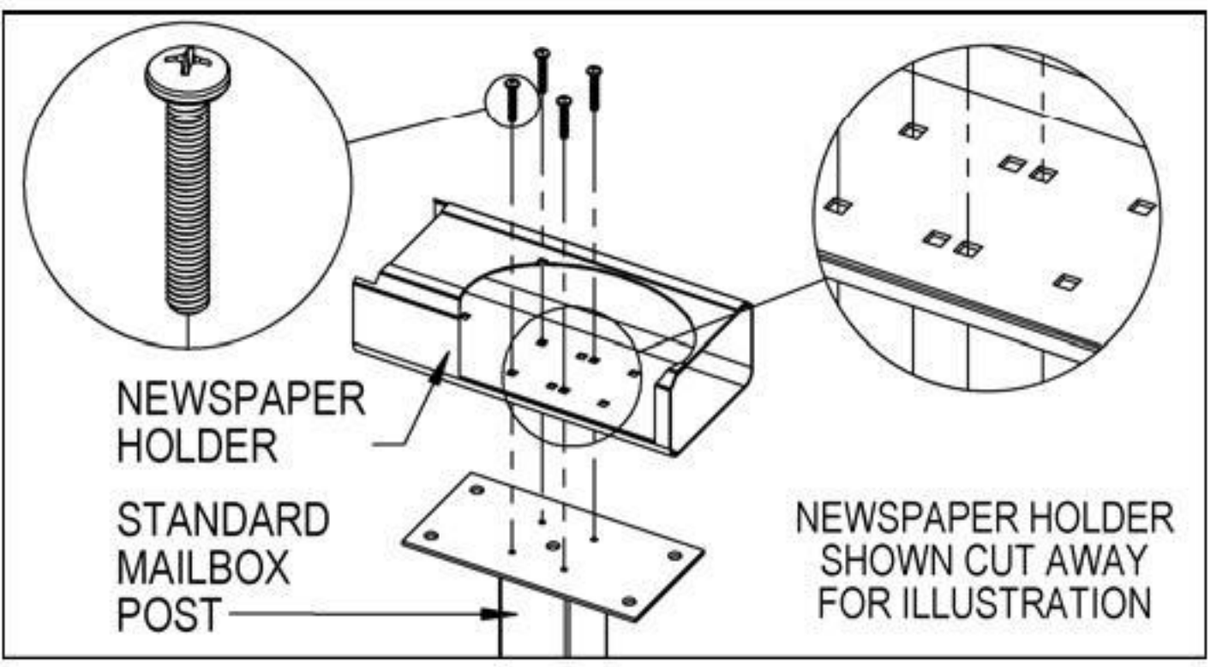

Newspaper Holder to Decorative Mailbox Post Installation

All hardware to attach the newspaper holder to the post is included with the post. To install the newspaper holder to the post, install six (6) 5/16"-18 X 3/4" long carriage bolts through the (6) square holes shown in the inside floor of newspaper holder and through the six (6) square holes on the top plate of the decorative post arm. Install 5/16" flat washers and 5/16"-18 hex nuts on the ends of the six (6) bolts protruding below the top plate of the decorative post arm. Cover the hex nuts with cap plugs.

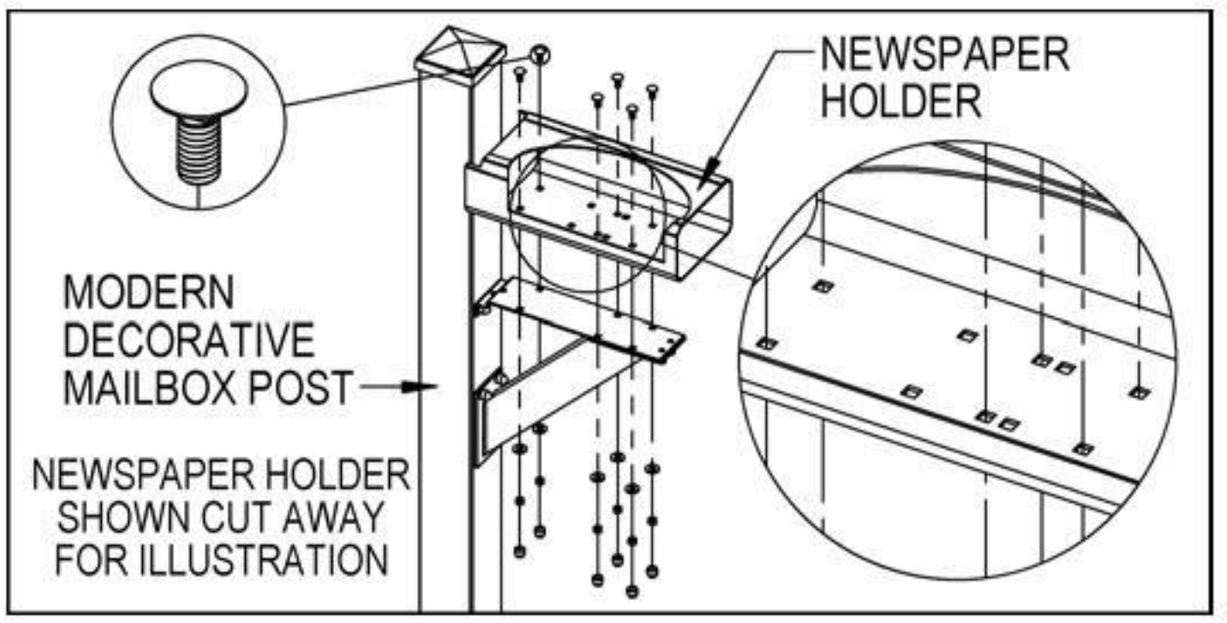

Mailbox Installation on a Newspaper Holder and Standard Mailbox Post

All hardware to attach the mailbox to the newspaper holder is included with the newspaper holder. To attach the mailbox to the newspaper holder, install four (4) 5/16"-18 X 3/4" long carriage bolts into (4) square holes in the floor of the mailbox and through the four (4) square holes shown on the top of the newspaper holder. Install 5/16" flat washers and 5/16"-18 hex nuts on the ends of the four (4) bolts protruding below the top of the newspaper holder. Cover the hex nuts with cap plugs. Installation is complete. Additional hardware provided is not needed and may be discarded.

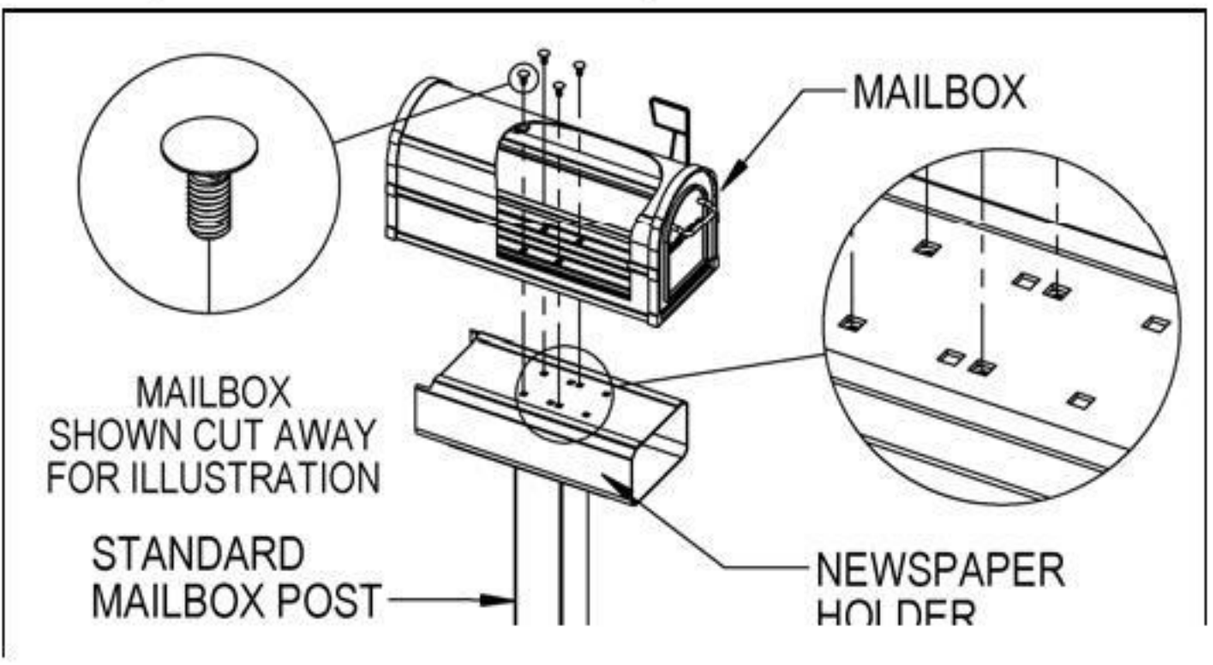

Mailbox Installation on a Newspaper Holder and Decorative Mailbox Post

All hardware to attach the mailbox to the newspaper holder is included with the newspaper holder. To attach the mailbox to the newspaper holder, install four (4) 5/16"-18 X 3/4" long carriage bolts into (4) square holes in the floor of the mailbox and through the four (4) square holes shown on the top of the newspaper holder. Install 5/16" flat washers and 5/16"-18 hex nuts on the ends of the four (4) bolts protruding below the top of the newspaper holder. Cover the hex nuts with cap plugs. Installation is complete. Additional hardware provided is not needed and may be discarded.

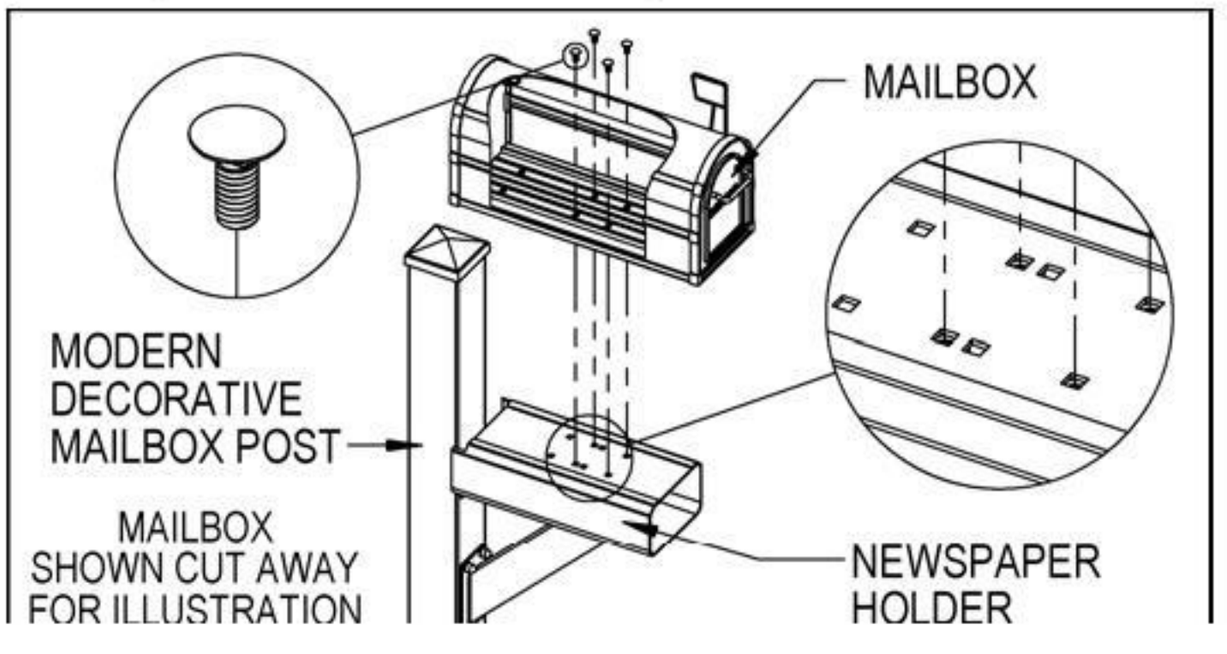

Antique Rural Mailboxes – 4850A

Antique Newspaper Holders on Deluxe Mailbox Post Installation Instructions

U.S.P.S. APPROVED

Installing Newspaper Holders on Deluxe Mailbox Posts

Thank you for selecting Salsbury Industries 4850A antique rural mailbox.

This instruction sheet is for installing 4850A antique rural mailbox(es) on a Salsbury deluxe mailbox post with 4815A antique newspaper holder(s). Other installation instructions are available for installing the mailboxes on a standard mailbox post or on a decorative mailbox post, installing the mailbox on spreaders, and mounting the post in a concrete footing.

When you install a curbside or roadside mailbox, make sure that it is easily accessible to the mail carrier. By regulation it should be 41" to 45" from the ground or street surface up to the inside floor of the mailbox. The door should be set back 6" to 8" from the front face of the curb or the road edge. However, you should check with your local postmaster to ensure that the mailbox is installed according to local regulations.

Newspaper Holder Installation to Deluxe Post

Installation of newspaper holders to each deluxe post, 4870 one-sided, or 4872, 4873 and 4874 two-sided, or 4875 bridge style is the same. Attach one newspaper holder to the 4870 one-sided post. Attach one additional newspaper holder to the 4872 two-sided post. Attach two additional newspaper holders to the 4873 two-sided post. Attach three additional newspaper holders to the 4874 two-sided post and four additional newspaper holders to the 4875 bridge style post. All hardware required to assemble the newspaper holders(s) to the deluxe mailbox post is provided with the post. To attach a newspaper holder to the post, install four (4) 5/16"-18 x 2" long pan head bolts through the four (4) square holes shown in the inside floor of the newspaper holder and through the four (4) tapped holes in the arm of the deluxe mailbox post. Insert a Phillips head screw driver through each square hole directly above, and in the top of the newspaper holder, to tighten the pan head bolts. Repeat these steps for the other newspaper holder(s).

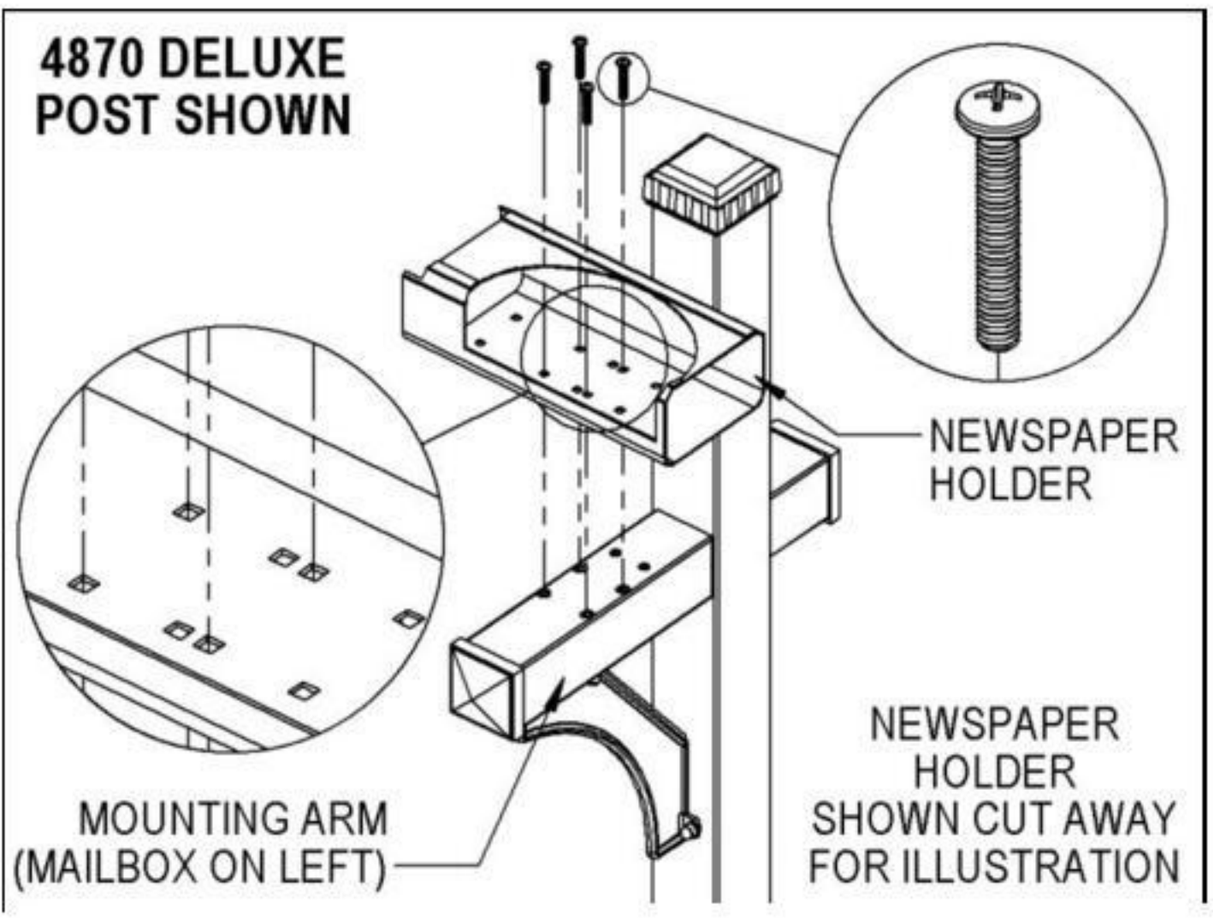

Mailbox Installation to Newspaper Holders

Installation of the mailbox to the newspaper holder on each deluxe post, 4870 one-sided, or 4872, 4873 and 4874 two-sided, or 4875 bridge style is the same. Attach one mailbox to the 4870 one-sided post. Attach one additional mailbox to the 4872 two-sided post. Attach two additional mailboxes to the 4873 two-sided post. Attach three additional mailboxes to the 4874 two-sided post and four additional mailboxes to the 4875 bridge style post. All hardware to attach the mailbox(es) to the newspaper holder(s) is included with the newspaper holder(s). To attach a mailbox to a newspaper holder, open the front door of the mailbox and install four (4) 5/16"-18 X 3/4" long carriage bolts into (4) square holes in the floor of the mailbox and through the four (4) square holes shown on the top of the newspaper holder. Install 5/16" flat washers and 5/16"-18 hex nuts on the ends of the four (4) bolts protruding below the top of the newspaper holder. Cover the hex nuts with cap plugs. Repeat these steps for the other mailbox(es). Installation is now complete. Additional hardware provided is not needed and may be discarded.

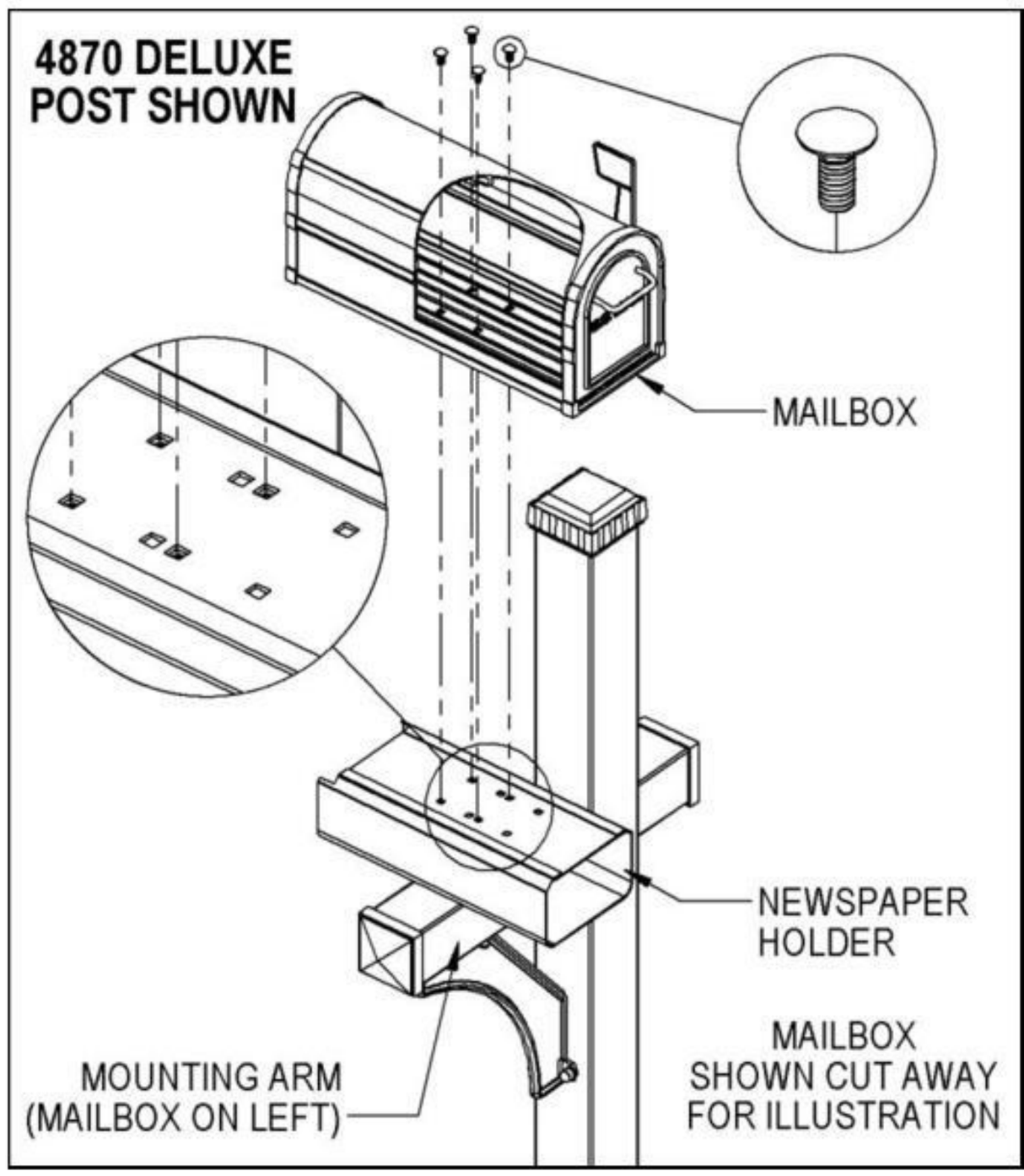

Note: On the 4870 deluxe mailbox post, the longer mounting arm which accommodates the newspaper holder and mailbox can be on either the left or right side. When attaching the post to the ground, position the post so the longer mounting arm is on the side desired. Then mount the newspaper holder and mailbox on the mounting arm with the mailbox facing the street or roadway.

Antique Rural Mailboxes – 4850A

2-Wide, 3-Wide and 4-Wide Spreader & Standard Mailbox Post Installation Instructions

U.S.P.S. APPROVED

Installing Mailboxes on Spreader & Standard Post

Thank you for selecting Salsbury's 4850A antique rural mailbox.

This instruction sheet is for installing 4850A antique rural mailboxes on a 2-wide, 3-wide or 4-wide spreader and a standard mailbox post. A different instruction sheet is available for installing 4850A antique rural mailboxes on a 5-wide spreader. Other installation instructions are available for installing the mailboxes and spreaders on a modern decorative mailbox post, mounting a single mailbox on a decorative or standard mailbox post, mounting a newspaper holder, and mounting the post in a concrete footing.

When you install a curbside or roadside mailbox, make sure that it is easily accessible to the mail carrier. By regulation it should be 41" to 45" from the ground or street surface up to the inside floor of the mailbox. The door should be set back 6" to 8" back from the front face of the curb or the road edge. However, you should check with your local postmaster to ensure that the mailbox is installed according to local regulations.

4882 2-Wide Spreader

All hardware to attach the spreader to the standard mailbox post is included with the spreader. To attach the spreader to the standard mailbox post, install four (4) 5/16"-18 X 1" long hex flange head bolts through the four (4) center square holes of the spreader and through the four (4) tapped holes on the top plate of the standard mailbox post. Cover the hex flange head bolts with cap plugs.

All hardware to attach the mailboxes to the spreader is included with the spreader. To attach a mailbox, open the front door of the mailbox and install four (4) 5/16"-18 x 1-3/4" long carriage bolts through the four (4) square holes in the inside floor of the mailbox, through four (4) 5/8" nylon spacers (thread onto bolt), and through the four (4) corresponding square holes in top of the spreader. Install 5/16" flat washers and 5/16"-18 hex nuts on the ends of the four (4) bolts protruding below the bottom of the spreader. Repeat these steps for the other mailbox. Installation is now complete. Additional hardware provided is not needed and may be discarded.

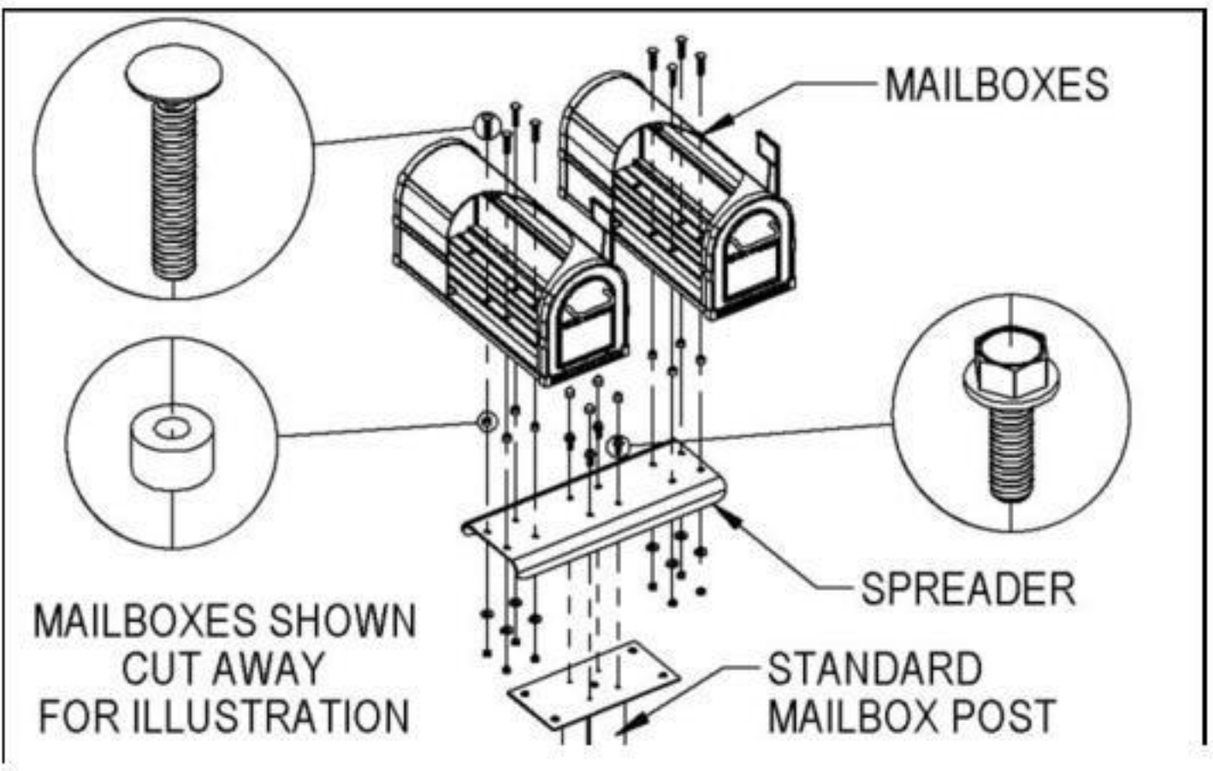

4883 3-Wide Spreader

All hardware to attach the spreader to the standard mailbox post is included with the post. To attach the spreader to the standard mailbox post requires simultaneously attaching the center mailbox to the spreader and to the standard post. Start by opening the front door of the center mailbox and install four (4) 5/16"-18 X 2" long pan head bolts through the four (4) square holes in the inside floor of the center mailbox, through four (4) 5/8" nylon spacers (thread onto bolt), through the four (4) center square holes of the spreader, and through the four (4) tapped holes on the top plate of the standard mailbox post.

All hardware to attach the remaining two mailboxes to the spreader is included with the spreader. To attach an additional mailbox, open the front door of the mailbox and install four (4) 5/16"-18 x 1-3/4" long carriage bolts through the four (4) square holes in the inside floor of the mailbox, through four (4) 5/8" nylon spacers (thread onto bolt), and through the four corresponding square holes in top of the spreader. Install 5/16" flat washers and 5/16"-18 hex nuts on the ends of the four (4) bolts protruding below the bottom of the spreader. Repeat these steps for the other mailbox. Installation is now complete.

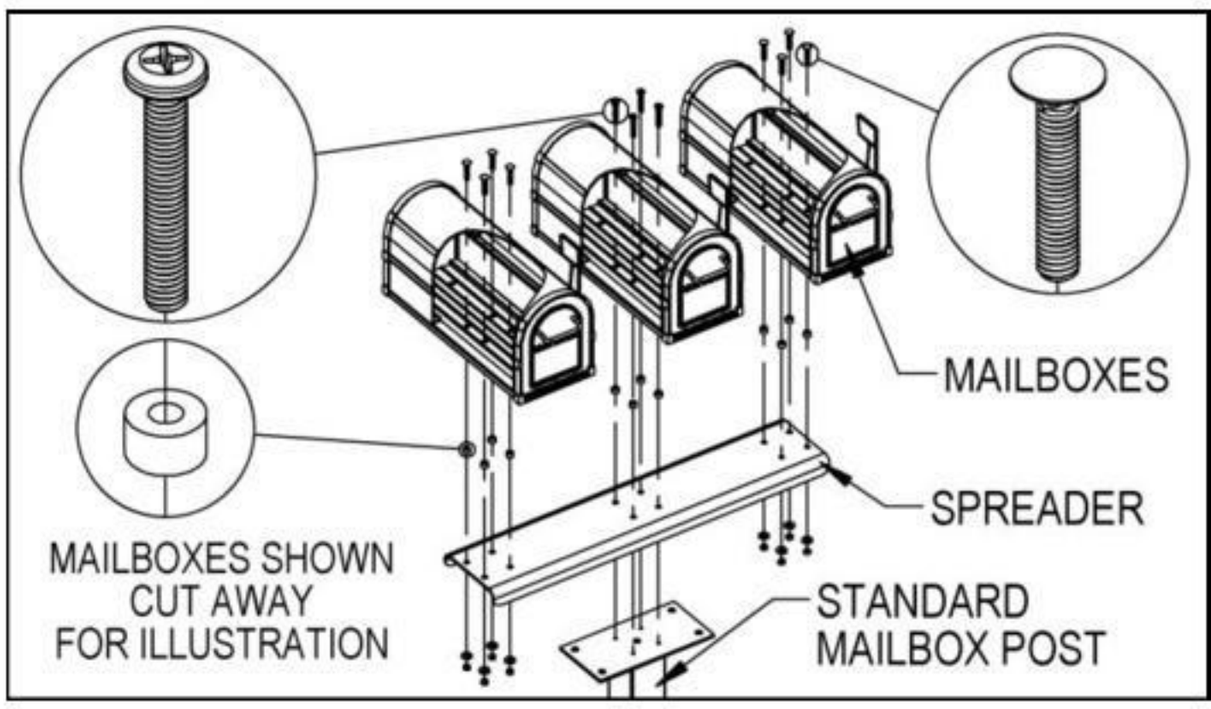

4884 4-Wide Spreader

To install the 4-wide spreader, follow the instructions for the "4882 2-Wide Spreader" and attach an additional mailbox at each end of the spreader.

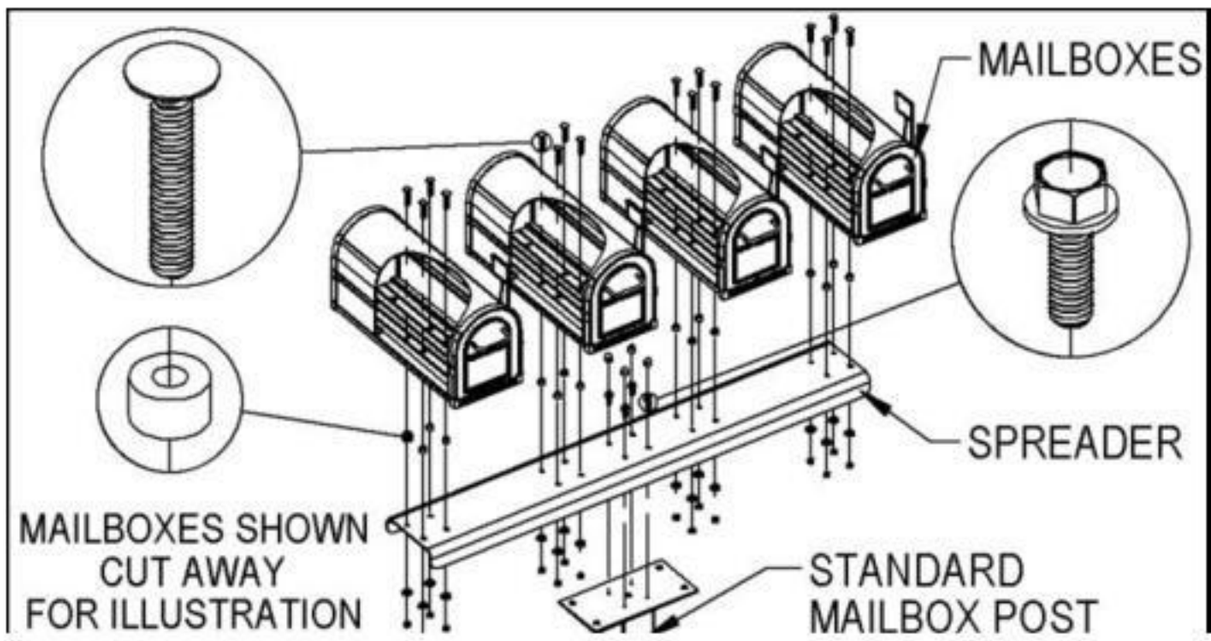

Antique Rural Mailboxes – 4850A
5-Wide Spreader & Standard Mailbox Post
Installation Instructions

U.S.P.S. APPROVED

Installing Mailboxes on Spreader & Standard Post

Thank you for selecting Salsbury's 4850A antique rural mailbox.

This instruction sheet is for installing 4850A antique rural mailboxes on a 5-wide spreader and a standard mailbox post. A different instruction sheet is available for installing 4850A antique rural mailboxes on a 2-wide, 3-wide or 4-wide spreader. Other installation instructions are available for installing the mailboxes and spreaders on a modern decorative mailbox post, mounting a single mailbox on a decorative or standard mailbox post, mounting a newspaper holder, and mounting the post in a concrete footing.

When you install a curbside or roadside mailbox, make sure that it is easily accessible to the mail carrier. By regulation it should be 41" to 45" from the ground or street surface up to the inside floor of the mailbox. The door should be set back 6" to 8" back from the front face of the curb or the road edge. However, you should check with your local postmaster to ensure that the mailbox is installed according to local regulations.

4885 5-Wide Spreader

All hardware to attach the spreader to the standard mailbox post is included with the post. To attach the spreader to the standard mailbox post requires simultaneously attaching the center mailbox to the spreader and to the standard post. Start by opening the front door of the center mailbox and install four (4) 5/16"-18 X 2" long pan head bolts through the four (4) square holes in the inside floor of the center mailbox, through four (4) 5/8" nylon spacers (thread onto bolt), through the four (4) center square holes of the spreader, and through the four (4) tapped holes on the top plate of the standard mailbox post.

All hardware to attach the remaining four mailboxes to the spreader is included with the spreader. Next attach an additional mailbox adjacent to the center mailbox. Start by opening the front door of the mailbox and install four (4) 5/16"-18 x 1-3/4" long carriage bolts through the four (4) square holes in the inside floor of the mailbox, through four (4) 5/8" nylon spacers (thread onto bolt), through the corresponding square holes in top of the spreader, and through the corresponding square holes in the top plate of a support arm (supplied with spreader). Install 5/16" flat washers and 5/16"-18 hex nuts on the ends of the four (4) bolts protruding below the bottom of the support arm. Complete the installation of the support arm by drilling a 3/16" diameter hole though each hole in the vertical plate of the support arm and through the post. Install 1/4" flat washers and 1/4" x 1" long lag screws into the post. Cover the lag screws with cap plugs. Repeat these steps for the other mailbox adjacent to the center mailbox.

To install an outermost mailbox, open the front door of the mailbox and install four (4) 5/16"-18 x 1-3/4" long carriage bolts through the four (4) square holes in the inside floor of the mailbox, through four (4) 5/8" nylon spacers (thread onto bolt), and through the corresponding square holes in top of the spreader. Install 5/16" flat washers and 5/16"-18 hex nuts on the ends of the four (4) bolts protruding below the bottom of the spreader. Repeat these steps for the remaining mailbox. Installation is now complete.

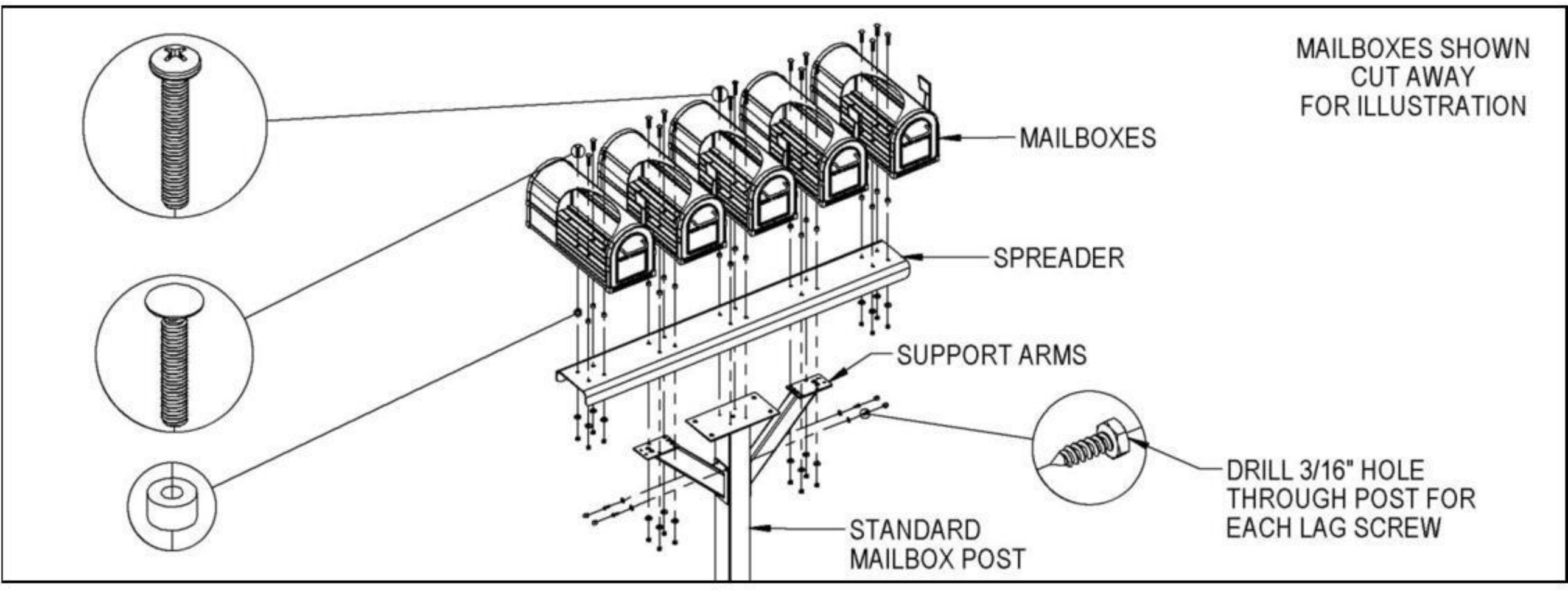

Antique Rural Mailboxes – 4850A

Spreader & Modern Decorative Mailbox Post Installation Instructions

U.S.P.S. APPROVED

Thank you for selecting Salsbury's 4850A antique rural mailbox. This instruction sheet is for installing 4850A antique rural mailboxes on 2-wide or 3-wide spreaders and a Salsbury modern decorative mailbox post. Other installation instructions are available for installing the mailboxes and spreaders on a standard mailbox post, mounting a single mailbox on a decorative or standard mailbox post, mounting a newspaper holder, and mounting the post in a concrete footing.

When you install a curbside or roadside mailbox, make sure that it is easily accessible to the mail carrier. By regulation it should be 41" to 45" from the ground or street surface up to the inside floor of the mailbox. The door should be set back 6" to 8" back from the front face of the curb or the road edge. However, you should check with your local postmaster to ensure that the mailbox is installed according to local regulations.

4882 2-Wide Spreader

All hardware to attach the spreader to the modern decorative mailbox post is included with the post. To attach the spreader to the modern decorative mailbox post, install four (4) 5/16"-18 X 2-3/4" long hex flange head bolts through the four (4) center square holes of the spreader, through the square spacer and through the four (4) square holes in the top plate of the modern decorative mailbox post arm. Install 5/16" flat washers and 5/16"-18 hex nuts on the ends of the four (4) bolts protruding below the bottom of the modern decorative mailbox post arm. Cover the hex flange head bolts and nuts with cap plugs.

All hardware to attach the mailboxes to the spreader is included with the spreader. To attach a mailbox, open the front door of the mailbox and install four (4) 5/16"-18 x 1-3/4" long carriage bolts through the four (4) square holes in the inside floor of the mailbox, through four (4) 5/8" nylon spacers (thread onto bolt), and through the four (4) corresponding square holes in top of the spreader. Install 5/16" flat washers and 5/16"-18 hex nuts on the ends of the four (4) bolts protruding below the bottom of the spreader. Repeat these steps for the other mailbox. Installation is now complete. Additional hardware provided is not needed and may be discarded.

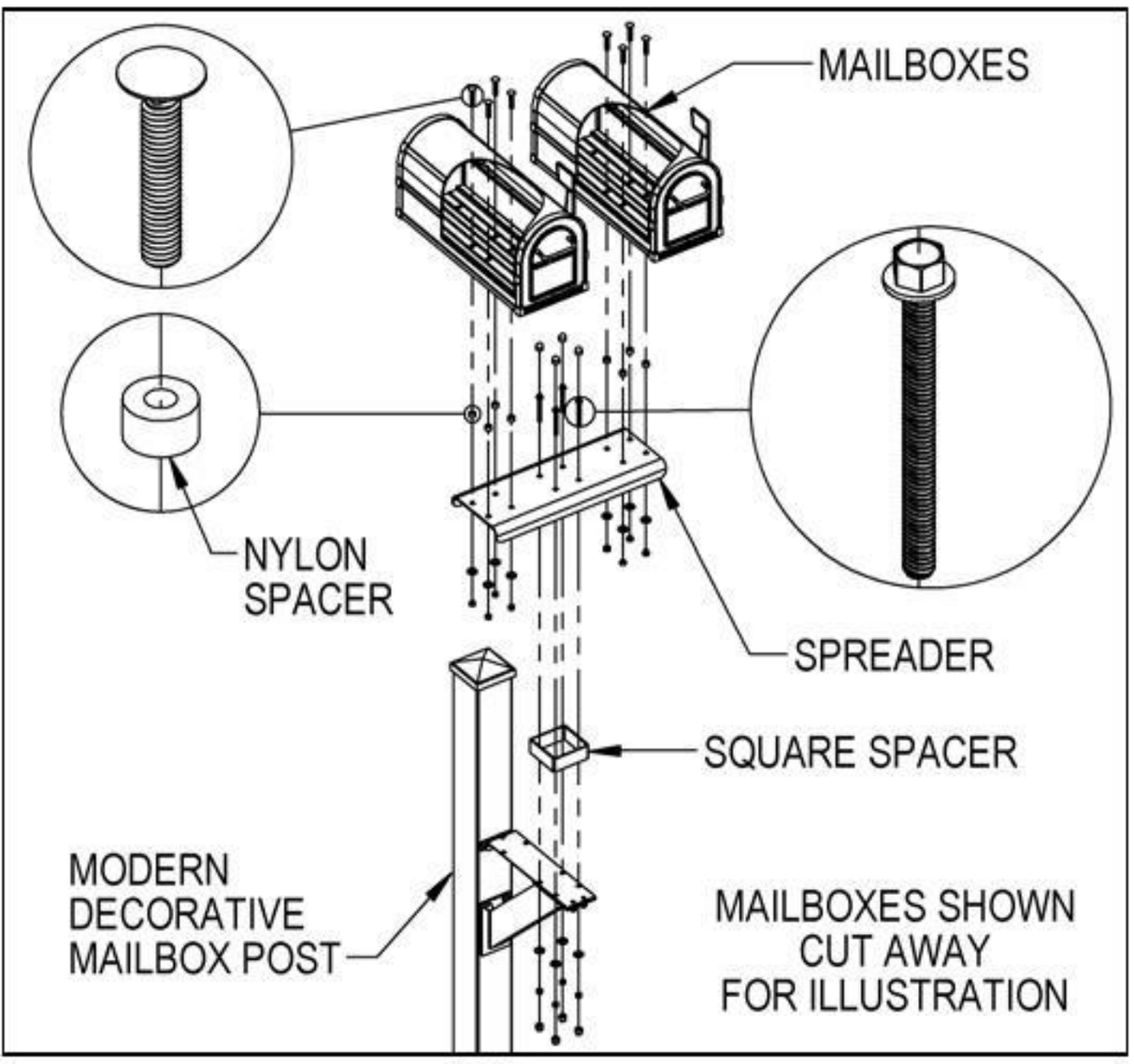

4883 3-Wide Spreader

All hardware to attach the spreader to the modern decorative mailbox post is included with the post. To attach the spreader to the modern decorative mailbox post requires simultaneously attaching the center mailbox to the spreader and to the modern decorative post. Start by opening the front door of the center mailbox and install four (4) 5/16"-18 X 3" long carriage bolts through the four (4) square holes in the inside floor of the center mailbox, through four (4) 5/8" nylon spacers (thread onto bolt), through the four (4) center square holes of the spreader, through the square space and through the four (4) square holes in the top plate of the modern decorative mailbox post arm. Install 5/16" flat washers and 5/16"-18 hex nuts on the ends of the four (4) bolts protruding below the bottom of the modern decorative mailbox post arm. Cover the nuts with cap plugs.

All hardware to attach the remaining two mailboxes to the spreader is included with the spreader. To attach an additional mailbox, open the front door of the mailbox and install four (4) 5/16"-18 x 1-3/4" long carriage bolts through the four (4) square holes in the inside floor of the mailbox, through four (4) 5/8" nylon spacers (thread onto bolt), and through the four corresponding square holes in top of the spreader. Install 5/16" flat washers and 5/16"-18 hex nuts on the ends of the four (4) bolts protruding below the bottom of the spreader. Repeat these steps for the other mailbox. Installation is now complete. Additional hardware provided is not needed and may be discarded.

