Antique Brass Mailboxes – 4410 and 4420
Standard Style Installation Instructions

Made of solid brass with a handcrafted antique finish, Salsbury 4410 and 4420 standard antique brass mailboxes will provide years of maintenance free service. While the hole locations differ, the mounting method is the same for both the 4410 and 4420 mailboxes.

Mounting Mailbox to a Flat Wall

1. The installation fasteners are not provided due to the variation in wall types to which the mailbox might be mounted. Select fasteners and anchors appropriate for the type of wall.

2. Mounting access is provided by opening the lid.

3. Where possible, it is best to shield the mailbox from direct weather conditions.

4. Contact your local U.S.P.S. office for the required height of the mailbox on the wall.

5. Holding the mailbox aligned horizontally in the mounting position, mark on the wall the position of the 2 mounting holes in the back wall of the mailbox. The 2 dimpled holes are the mounting holes.

6. Attach the mailbox to the wall using the appropriate fasteners.

Cleaning

Use a non-abrasive mild cleaning solution and a soft cloth. Do not use harsh chemicals on or around this product.

4410 Antique Brass Mailbox – Horizontal Style

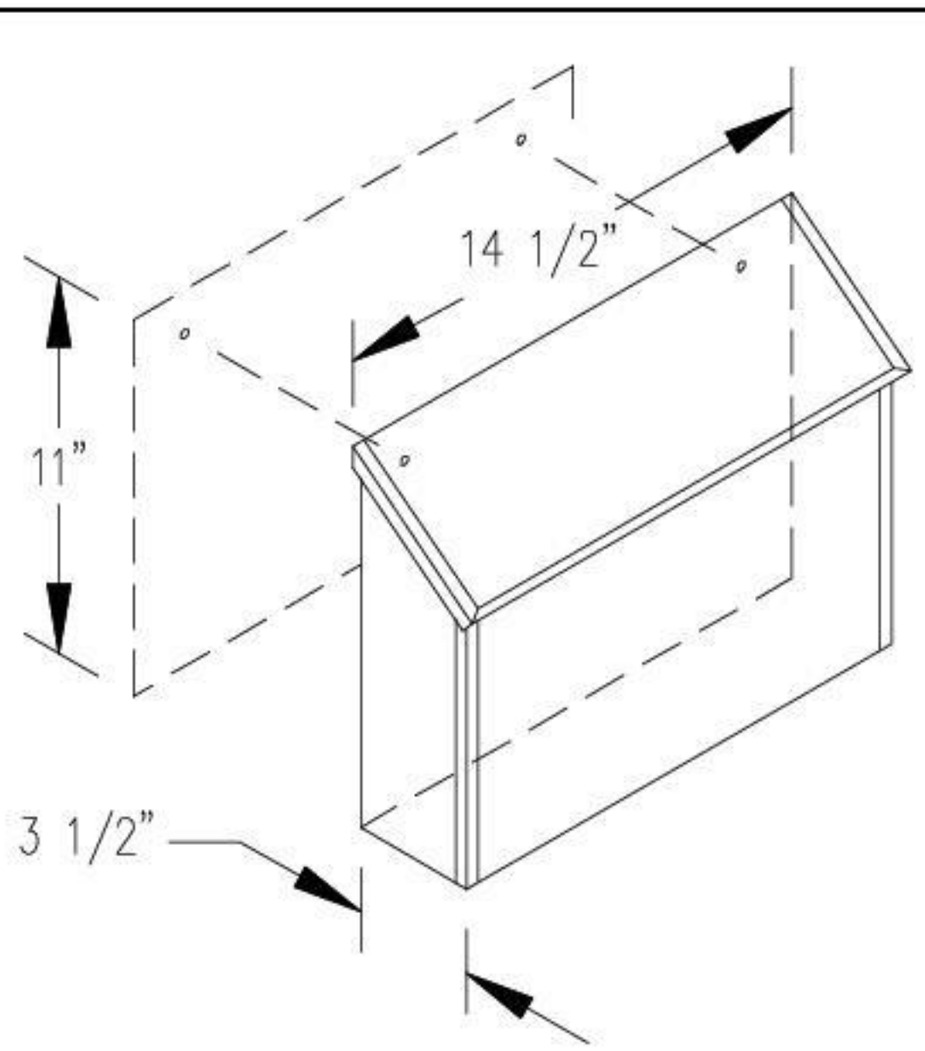

4420 Antique Brass Mailbox – Vertical Style

