Antique Brass Mailboxes – 4440
Recessed Mounted Installation Instructions

Thank you for selecting Salsbury's 4440 Antique Brass Mailbox. We are confident that the quality and construction of the box will prove to be a good investment. The unit is fully assembled and ready for installation. These instructions are intended to assist you in a typical installation. They can be modified depending upon your choice in column style, materials and fastening. It is recommended to have the unit present before starting the construction to obtain the best possible installation.

Mailbox and Rough Opening Dimensions

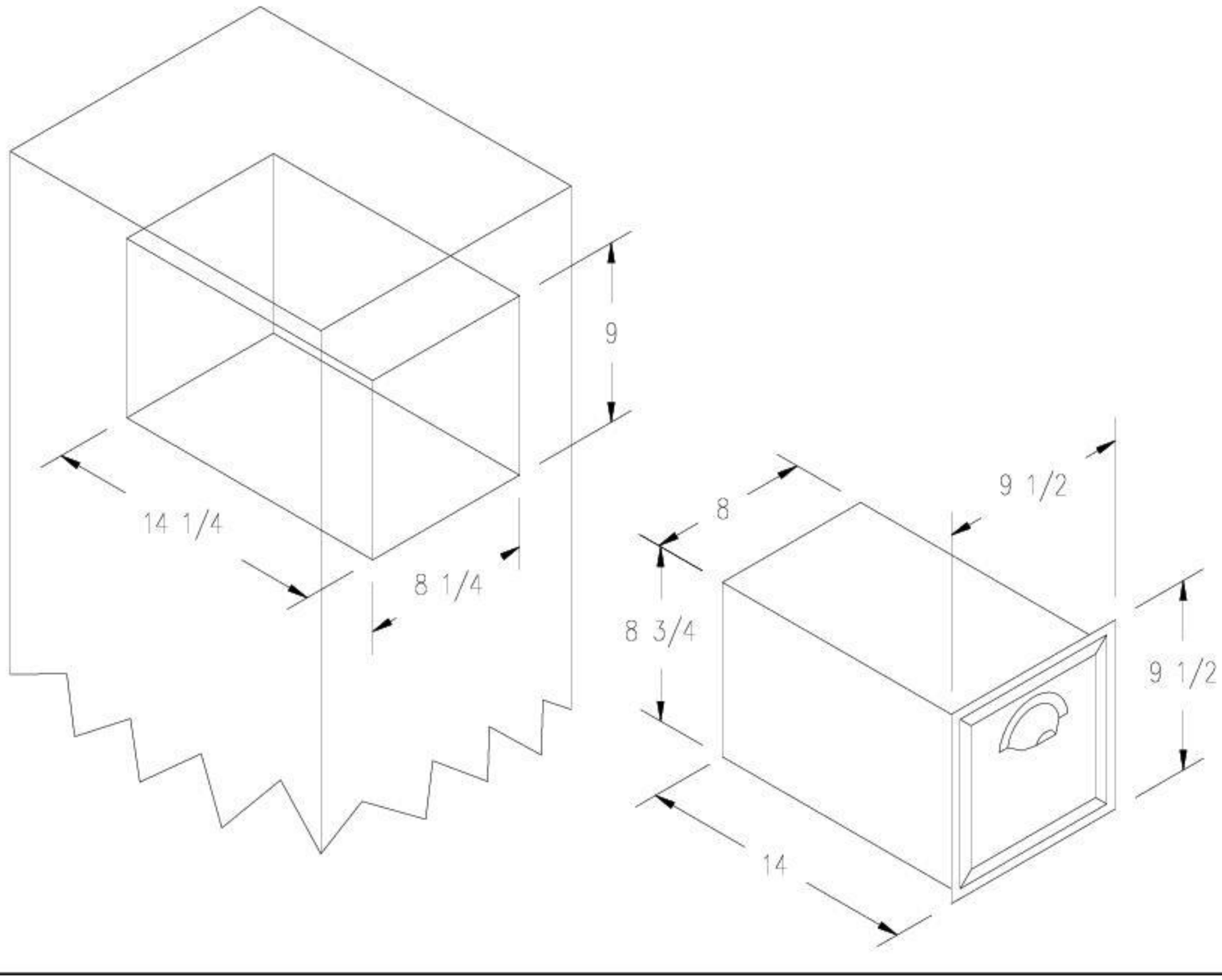

Installation

1. Ensure that the rough opening is larger than the sheet metal box. Insertion of the box into the rough opening is easier if there is adequate clearance around the box.

2. It is strongly suggested, when installing the mailbox into a masonry structure, that the mailbox be made removable by using screws to attach the sheet metal box into the rough opening. It is much easier to replace or repair the mailbox if it is removable.

Notes

1. Column or wall opening and lumber frame must be square.

2. Hardware is not included to fasten unit into rough opening.