Aluminum Boxes - 2400 Series
Data Distribution System Installation Instructions

Thank you for selecting Salsbury's 2400 series rack ladder system data distribution units. We are confident that the quality and construction of the boxes will prove to be a good investment. The units are fully assembled and ready to be installed. All rack ladder system units have the same outside dimensions regardless of individual door size. They are designed to stack five (5) high in Salsbury's Rack Ladders (#2400). These instructions are intended to assist you in a typical wall installation, and it should be understood that they can be modified depending upon your choice in fasteners and materials. It is also recommended to have the units present before starting the wall construction to obtain the best possible installation.

Typical Installation

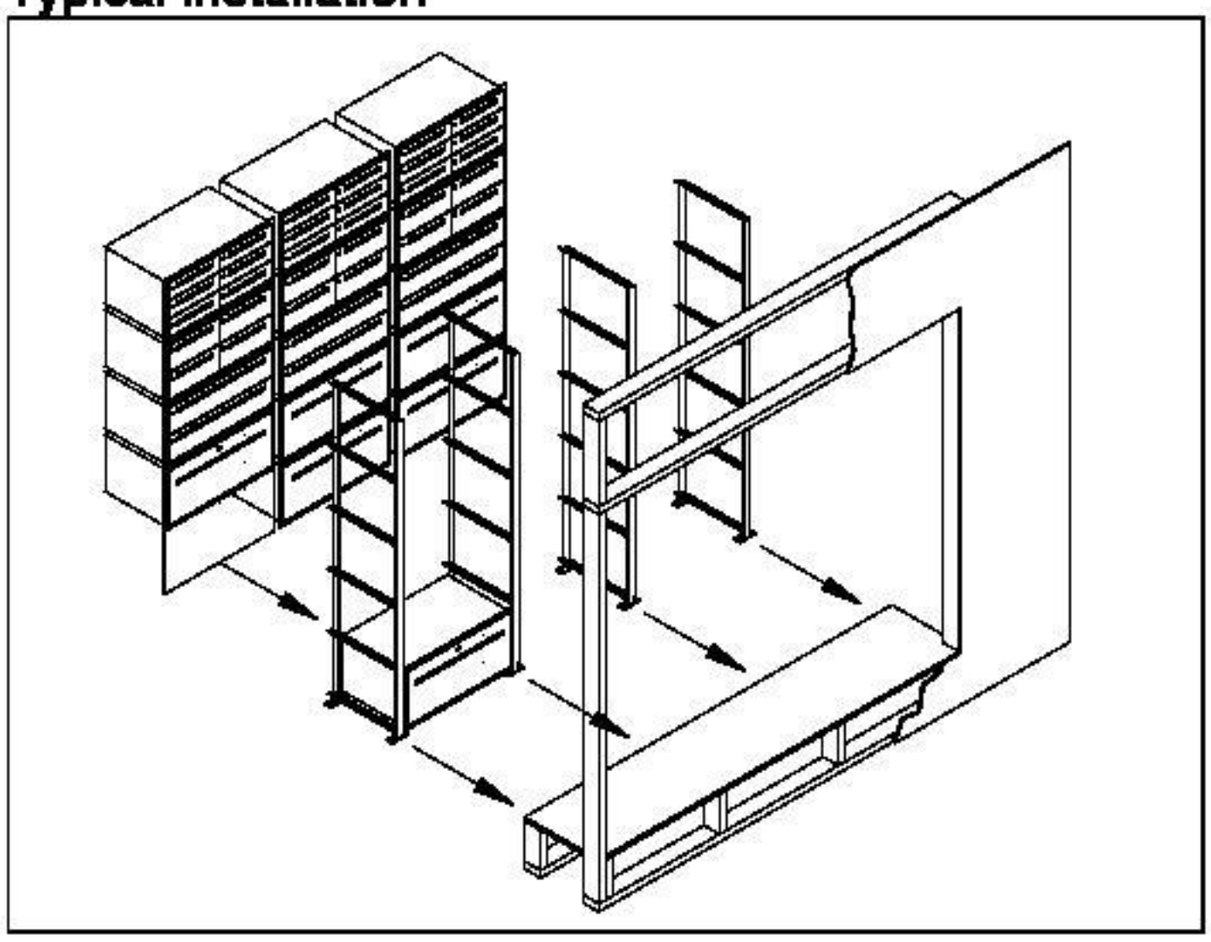

Standard Dimensions (Model 2406 Shown)

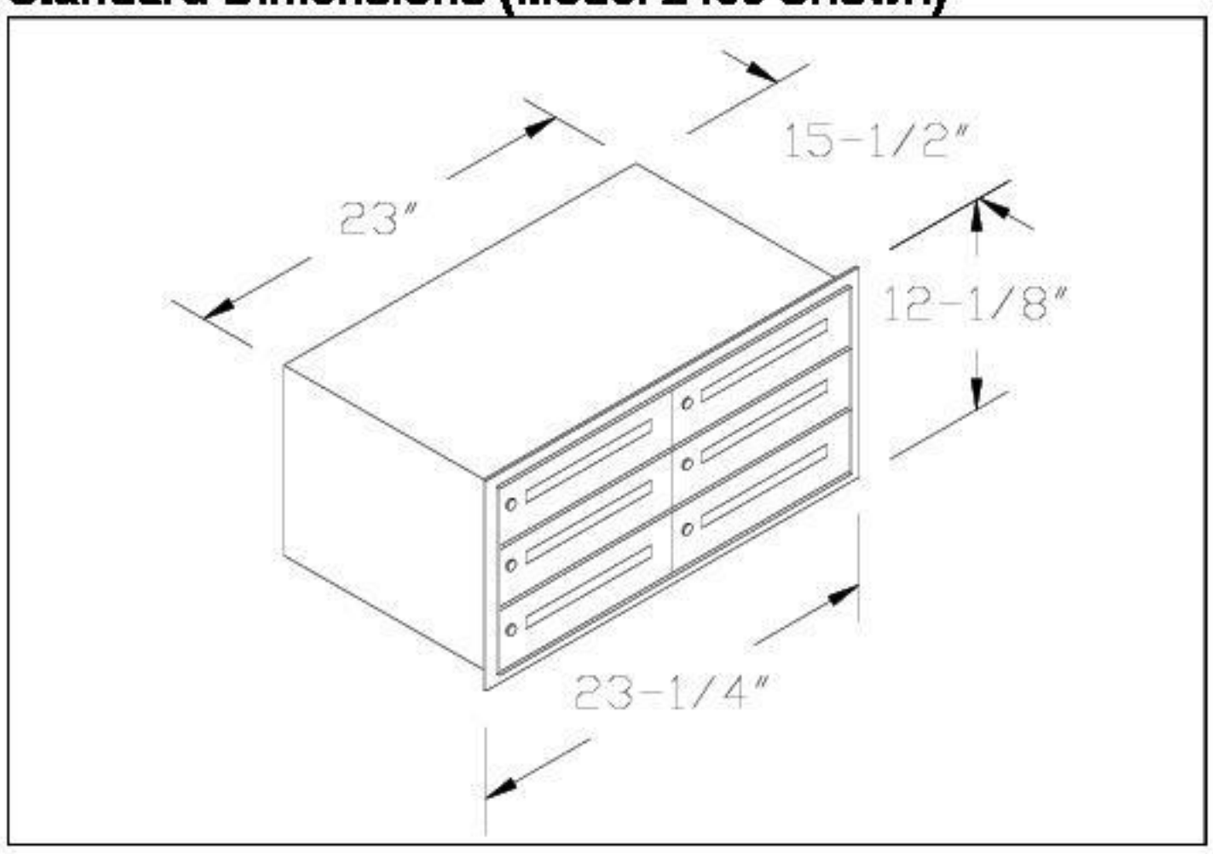

Notes

1. Wall opening and lumber frame must be square.
2. Boxes should be shielded from direct weather conditions.
3. Store keys in a safe place until ready for use.
4. Hardware is not included to fasten unit into rough opening.

Data Distribution Box Instructions

1. These data distribution boxes are to be stacked in rack ladders secured to a platform incorporated into the wall. Allowing 25-3/8" for the width of the first box column and 23-7/8" for each additional column (also add for any amount of desired space on each side of the installation), frame out the perimeter of the wall and secure to the floor.

2. A platform 10"H x 16"D and wide enough to support the total number of columns, should be constructed for the base of the installation and joined with the wall frame.

3. Allowing a 61-5/8"H opening from the platform, frame out the installation opening allowing enough room to position rack ladders 23-7/8" on center. Rack ladders should extend over the front edge 1/2" or 3/8", depending on the thickness of the drywall to be used. Lag bolt the bottom and top of the rack ladder to the wall. See the illustration on the next page. The front of the rack ladder should be flush with the drywall surface.

4. Add additional studs where needed and finish the wall with drywall.

5. Install the modules on the rack ladder assemblies from the back. Starting at the bottom, slide the module into the rack ladder support angles until it is tight with the front of the rack ladder. Repeat this procedure until the column is completed and proceed to the bottom of the next column until all modules are installed.

6. Secure the modules to the rack ladders from the rear with the cover strips. Slide the strips over the threaded studs and fasten with provided hex nuts. This clamps the modules into the rack ladders and completes the installation if there is no rear cover option.

7. The purchase and installation of the trim for the front of the modules is optional. There is enough trim in each kit for three (3) box columns. Fasten the clips to the wall using 1" wood screws around the perimeter of the boxes. See the illustration on the next page. The trim should be long enough to properly frame the installation and the corners should be mitered at a 45º angle.

8. The purchase and installation of the rear covers is optional. The rear cover option includes a hinged cover attached to a lockable cover strip on the hinge side (for an adjacent cover) and a lockable cover strip (without cover) for a single box column or the end of a row of boxes. See the illustration on this page. The lockable rear cover and the lockable cover strip are installed instead of the non-lockable cover strips that come with the rack ladders. They are installed over the threaded studs on the rear of the rack ladder and the provided hex nuts are installed on each threaded stud. This also clamps the modules into the rack ladders and completes the installation.

Trim Installation

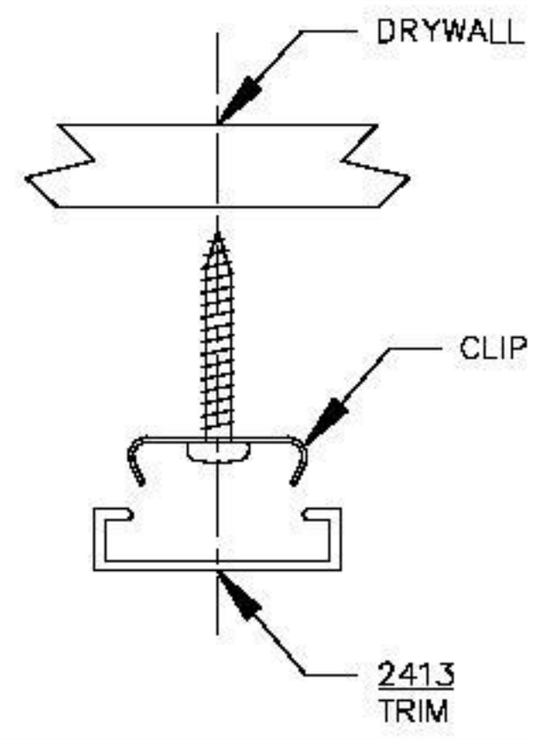

Rack Ladder and Rear Cover Installation

