Standard Free-Standing 4C Horizontal Mailbox ADA Accessibility Guidelines

Note: The shaded areas in the units listed below incorporate USPS accessibility regulations and the maximum number of compartments that fall below the ADA upper reach limit of 48". Consult local authorities for specific standards.

MAXIMUM HEIGHT UNITS - STANDARD HEIGHT

ADA compliant compartment

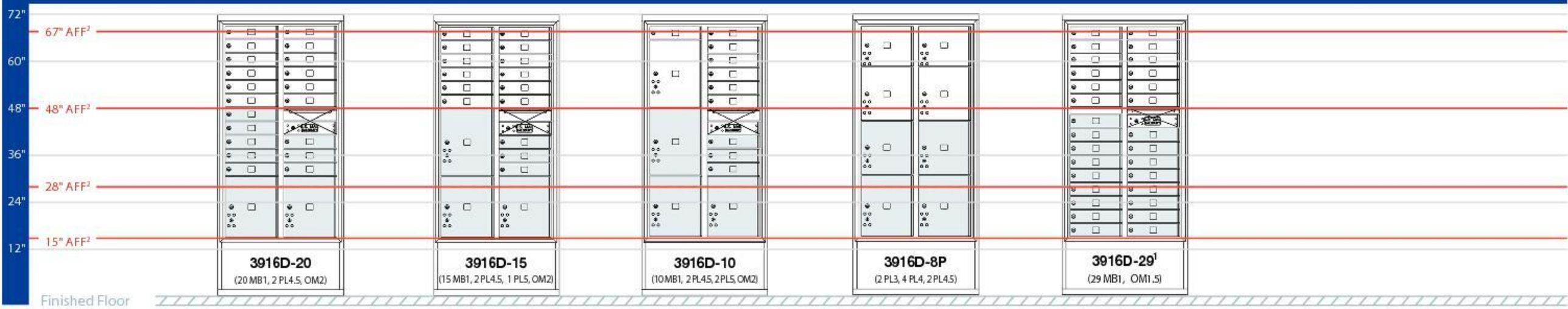

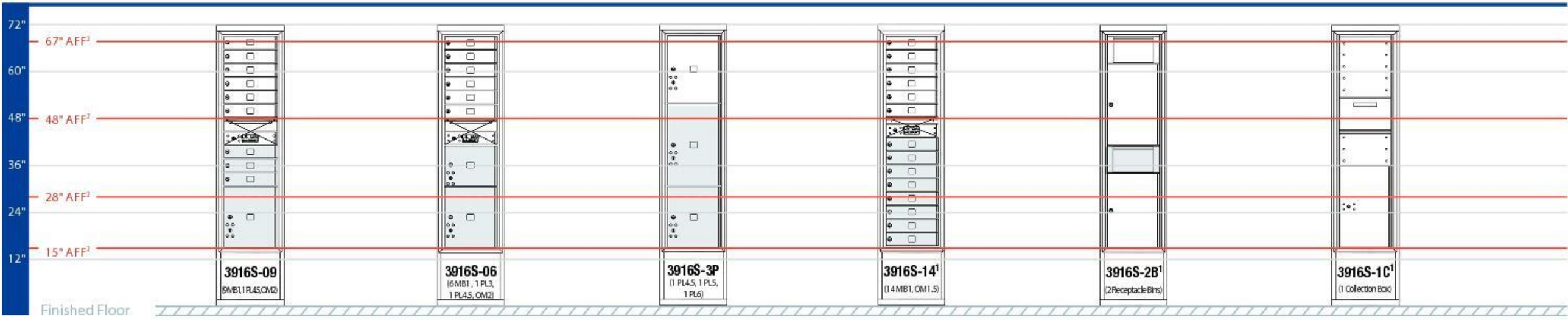

11 DOOR HIGH UNITS - STANDARD HEIGHT

ADA compliant compartment

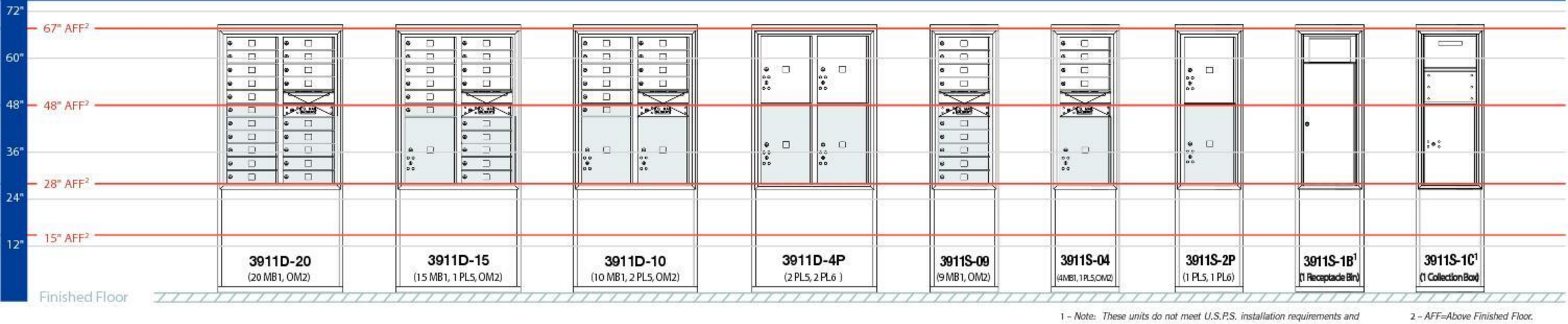

1 – *Note: These units do not meet U.S.P.S. installation requirements and are for private delivery only unless approved by local postal authorities.*

2 – *AFF=Above Finished Floor.*

Standard Free-Standing 4C Horizontal Mailbox ADA Accessibility Guidelines

Note: The shaded areas in the units listed below incorporate USPS accessibility regulations and the maximum number of compartments that fall below the ADA upper reach limit of 48". Consult local authorities for specific standards.

10 DOOR HIGH ADA UNITS - STANDARD HEIGHT

ADA compliant compartment

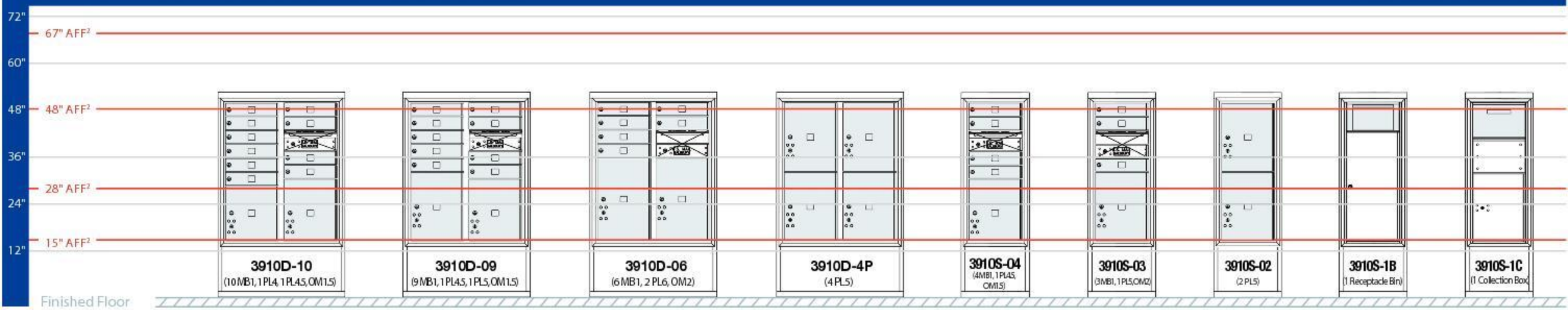

6 DOOR HIGH UNITS - STANDARD HEIGHT

ADA compliant compartment

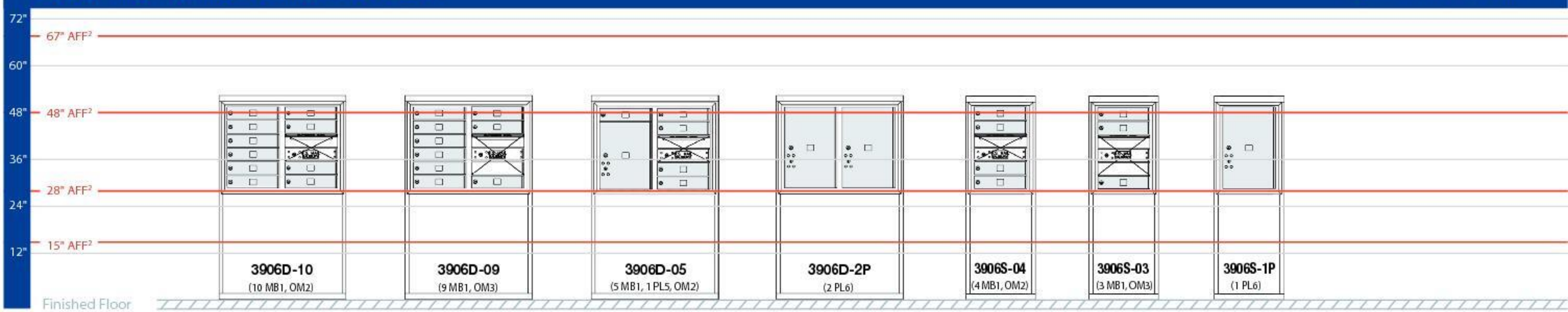

1 – *Note: These units do not meet U.S.P.S. installation requirements and are for private delivery only unless approved by local postal authorities.*

2 – *AFF=Above Finished Floor.*