ELENCO®
150 Carpenter Avenue
Wheeling, IL 60090
(847) 541-3800
Website: www.elenco.com
e-mail: elenco@elenco.com

DIGITAL / ANALOG TRAINER

MODEL XK-700K

A COMPLETE MINI-LAB FOR BUILDING, TESTING AND PROTOTYPING ANALOG AND DIGITAL CIRCUITS



Tools and meter shown not included.

Assembly & Instruction Manual

ELENCO®

Copyright © 2013, 1996 by ELENCO® Electronics, Inc. All rights reserved. Revised 2013 REV-G 753029
No part of this book shall be reproduced by any means; electronic, photocopying, or otherwise without written permission from the publisher.

PS-700-B

XK-700K POWER SUPPLY KIT (PS-700-B) PARTS LIST

RESISTORS

Qty.	Symbol	Value	Description	Part #
❒ 2	R1, R2	120Ω 5% 1/4W	(brown-red-brown-gold)	131200
❒ 2	R50, R51	1.2kΩ 5% 1/2W	(black-red-red-gold)	141201
❒ 1	VR3	1kΩ	Pot PC mount	192412
❒ 2	VR1, VR2	2kΩ	Pot PC mount	192421
❒ 1	VR4	100kΩ	Pot PC mount	192612

CAPACITORS

Qty.	Symbol	Value	Description	Part #
❒ 3	C7-C9	.1μF 100V	Mylar	251017
❒ 5	C12, C14-C17	100μF	Electrolytic (lytic)	281045
❒ 4	C1, C2, C4, C5	1000μF 35V	Electrolytic (lytic)	291046
❒ 1	C3	2200μF 25V	Electrolytic (lytic)	292225

SEMICONDUCTORS

Qty.	Symbol	Description	Part #
❒ 19	D1-D15, D26-D29	1N4001 Diode	314001
❒ 1	U1	LM317 Integrated circuit (IC)	330317
❒ 1	U5	LM337 Integrated circuit (IC)	330337
❒ 1	U3	LM7805 Integrated circuit (IC)	337805
❒ 1	U2	LM7812 Integrated circuit (IC)	337812
❒ 1	U4	LM7912 Integrated circuit (IC)	337912

MISCELLANEOUS

Qty.	Description	Part #	Qty.	Description	Part #
❒ 1	Transformer	44K500	❒ 4	Washer fiber	645404
❒ 1	PC board	514550	❒ 2	Lockwasher #8 EXT	646828
❒ 1	Fuse 1.25A	530125	❒ 1	Fuse holder	663000
❒ 1	Switch illuminated	541204	❒ 4	Bredblox 4-pin	665204
❒ 2	Connector 3-pin	591032	❒ 2	Terminal male crimp	666010
❒ 1	Connector 5-pin	591052	❒ 2	Terminal female crimp	666011
❒ 4	Bracket L 4-40 tap	613008	❒ 1	Manual	753029
❒ 1	Panel top	614108	❒ 5	Insulator mica	780002
❒ 1	XK-700 Frame	614501PB	❒ 5	Insulator washer	780101
❒ 4	Knob	622009	❒ 1	Silicon Grease	790004
❒ 1	Case	623051	❒ 6”	Wire #20 red stranded	813210
❒ 1	Strain relief	624003	❒ 2.5’	Wire #22 bare wire	845000
❒ 1	Spacer nylon 7/16” x 3/16” tap	624013	❒ 1	Line cord	862105
❒ 1	Connector receptacle	626020	❒ 3/4”	Tubing #20 black	890020
❒ 1	Connector plug	626021	❒ 2”	Shrink tubing 3/16”	890120
❒ 1	Screw 4-40 x 1/4” phillips, flat head	641431	❒ 1”	Shrink tubing 1/4”	890701
❒ 9	Screw 4-40 x 1/4” phillips truss	641438	❒ 2”	Shrink tubing 1/2”	891101-2
❒ 6	Screw 6-32 x 5/16” slotted	641641	❒ 2”	Shrink tubing 3/4”	899110-2
❒ 2	Screw 8-32 x 3/8” phillips	641840	❒ 1	Solder tube lead-free	LF99
❒ 2	Screw #4 x 1/4” phillips AB	642430			
❒ 4	Screw #6 x 1/2 phillips AB	642662			
❒ 4	Screw #6 x 3/8” phillips thread cutting	643652			
❒ 4	Nut 7mm	644101			
❒ 6	Nut 6-32	644601			
❒ 2	Nut 8-32	644800			
❒ 4	Washer 8mm x 14mm (Pot)	645101			
❒ 4	Washer #6 black	645400			

Screw Identification

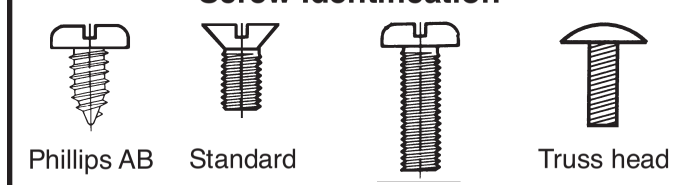

QUIZ - DIGITAL SECTION

INSTRUCTIONS: Complete the following examination, check your answers carefully.

1. The logic switches consist of . . .
   - ❒ A. two NAND gates and an SPST switch.
   - ❒ B. three OR gates.
   - ❒ C. two NAND gates and a DPDT switch.
   - ❒ D. one OR gate.
2. When the logic switch is thrown . . .
   - ❒ A. the contacts do not bounce.
   - ❒ B. a single transition is produced at the NAND gate output.
   - ❒ C. a multiple transition is produced at the NAND gate output.
   - ❒ D. none of the above.
3. If the X output is high, opening and closing the ground at X switch will . . .
   - ❒ A. cause the X output to go low.
   - ❒ B. cause the $\overline{X}$ output to go high.
   - ❒ C. cause the $\overline{X}$ output to go from high to low.
   - ❒ D. none of the above.
4. The logic indicator LED lights up when . . .
   - ❒ A. input voltage is 2V.
   - ❒ B. input voltage is greater than 2.8.
   - ❒ C. the IC output is high.
   - ❒ D. all of the above.
5. The logic switches use . . .
   - ❒ A. single pole single throw switches.
   - ❒ B. double pole double throw switches wires as single pole double throw switches.
   - ❒ C. two pole 5 position rotary switches.
   - ❒ D. 4 pole 3 position rotary switches.
6. The 100kΩ resistor on the logic indicator input . . .
   - ❒ A. divides the input voltage in half.
   - ❒ B. bias the input to +5V.
   - ❒ C. bias the input to GND.
   - ❒ D. turn on the LED.
7. When the logic switch is in the X position . . .
   - ❒ A. X is high, X is low.
   - ❒ B. X is high, X is high.
   - ❒ C. X is low, X is high.
   - ❒ D. X is low, X is low.
8. When the data switch is up and connected to the logic indicator . . .
   - ❒ A. the switch output is greater than 2.8V.
   - ❒ B. the switch output is GND.
   - ❒ C. the LED will be out.
   - ❒ D. none of the above.
9. The +5VDC power for the digital section comes from a . . .
   - ❒ A. 7805 IC.
   - ❒ B. 7905 IC.
   - ❒ C. 5V battery.
   - ❒ D. 7812 IC.
10. If pin 4 on U7B is high . . .
    - ❒ A. pin 3 is low.
    - ❒ B. pin 1 is low.
    - ❒ C. pin 2 and 6 are high.
    - ❒ D. pin 5 is high.

Answers: 1. C; 2. B; 3. D; 4. B; 5. B; 6. C; 7. A; 8. A; 9. A; 10. B

SCHEMATIC DIAGRAM

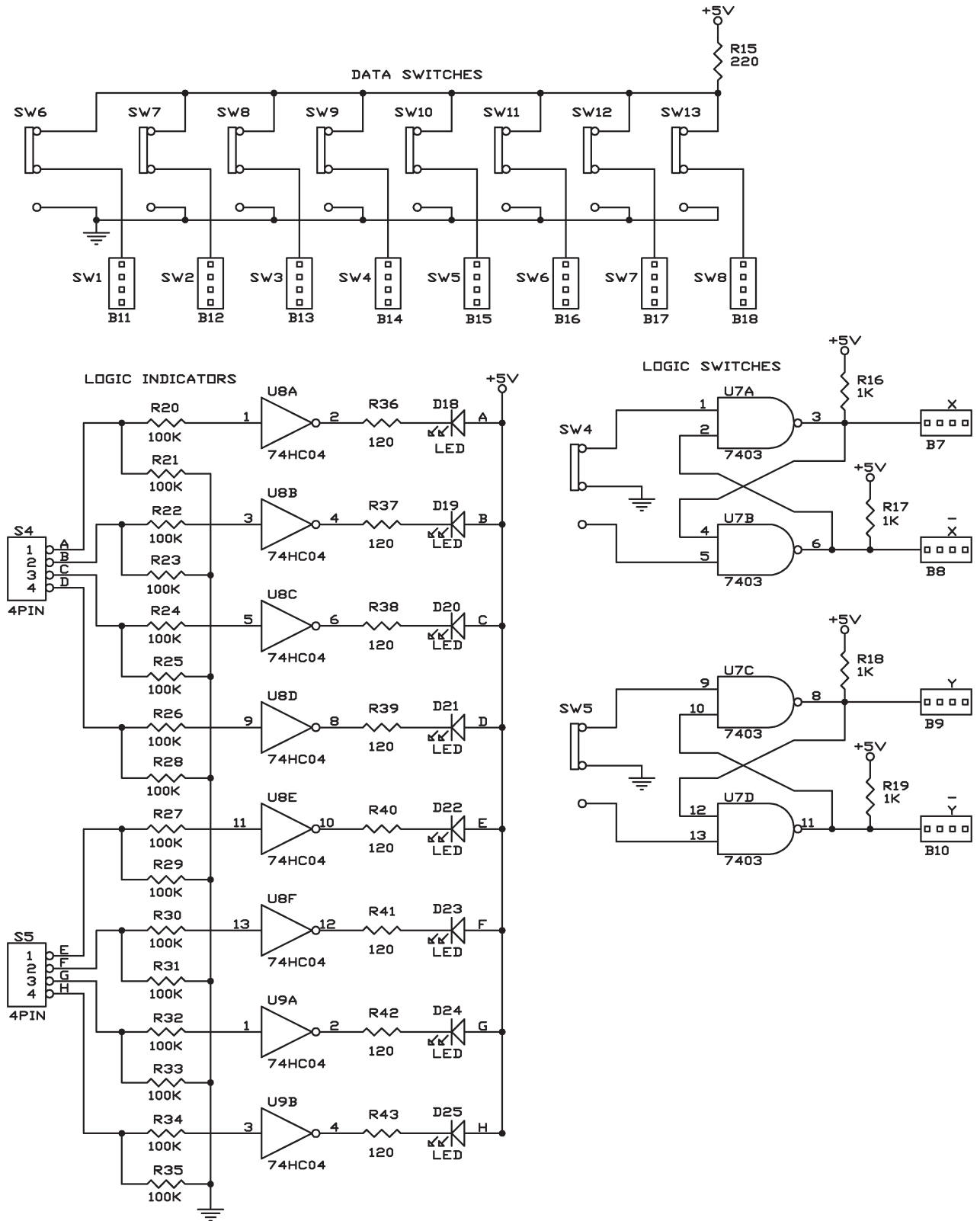

PARTS VERIFICATION

Before beginning the assembly process, first familiarize yourself with the components and this instruction book. Verify that all parts are present. This is done best by checking off each item in the parts list.

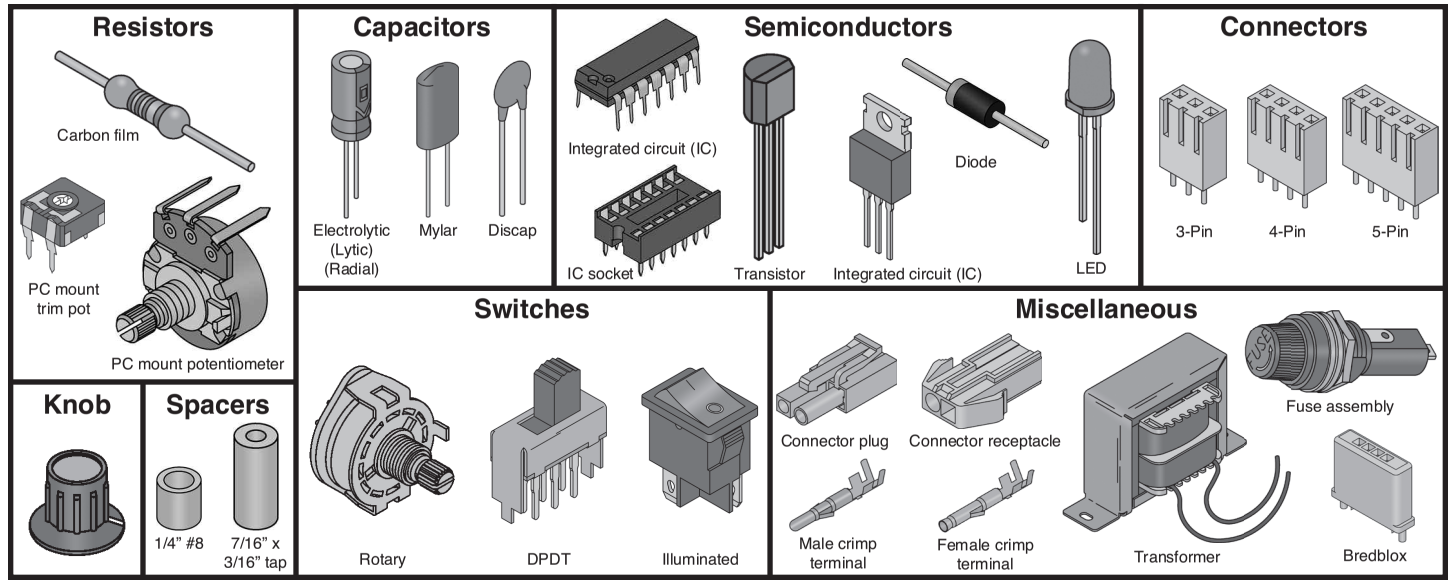

IDENTIFYING RESISTOR VALUES

Use the following information as a guide in properly identifying the value of resistors.

BAND 1 1st Digit	
Color	Digit
Black	0
Brown	1
Red	2
Orange	3
Yellow	4
Green	5
Blue	6
Violet	7
Gray	8
White	9

BAND 2 2nd Digit	
Color	Digit
Black	0
Brown	1
Red	2
Orange	3
Yellow	4
Green	5
Blue	6
Violet	7
Gray	8
White	9

Multiplier	
Color	Multiplier
Black	1
Brown	10
Red	100
Orange	1,000
Yellow	10,000
Green	100,000
Blue	1,000,000
Silver	0.01
Gold	0.1

Resistance Tolerance	
Color	Tolerance
Silver	±10%
Gold	±5%
Brown	±1%
Red	±2%
Orange	±3%
Green	±0.5%
Blue	±0.25%
Violet	±0.1%

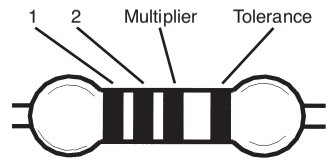

IDENTIFYING CAPACITOR VALUES

Capacitors will be identified by their capacitance value in pF (picofarads), nF (nanofarads), or μF (microfarads). Most capacitors will have their actual value printed on them. Some capacitors may have their value printed in the following manner. The maximum operating voltage may also be printed on the capacitor.

Electrolytic capacitors have a positive and a negative electrode. The negative lead is indicated on the packaging by a stripe with minus signs and possibly arrowheads. Also, the negative lead of a radial electrolytic is shorter than the positive one.

Multiplier	For the No.	0	1	2	3	4	5	8	9
	Multiply By	1	10	100	1k	10k	100k	.01	0.1

Warning:

If the capacitor is connected with incorrect polarity, it may heat up and either leak, or cause the capacitor to explode.

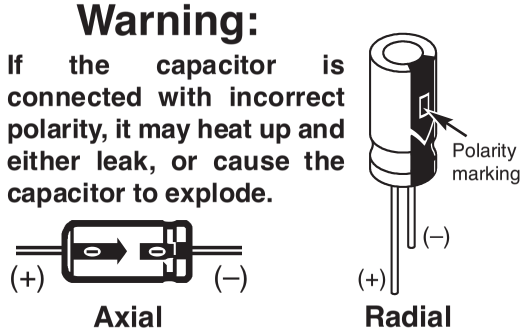

CERAMIC DISC

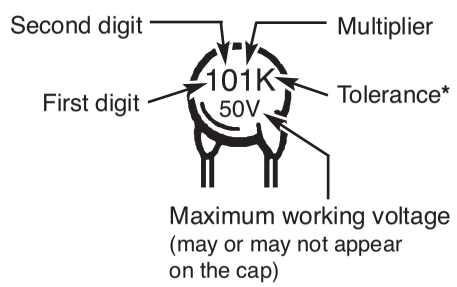

The value is 10 x 10 = 100pF, ±10%, 50V

* The letter M indicates a tolerance of ±20%
The letter K indicates a tolerance of ±10%
The letter J indicates a tolerance of ±5%

MYLAR

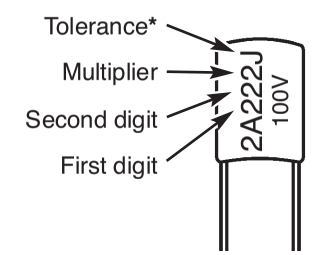

The value is 22 x 100 = 2,200pF or .0022μF, ±5%, 100V

Note: The letter "R" may be used at times to signify a decimal point; as in 3R3 = 3.3

CONSTRUCTION

Introduction

The most important factor in assembling your XK-700K Digital/Analog Trainer Kit is good soldering techniques. Using the proper soldering iron is of prime importance. A small pencil type soldering iron of 25 watts is recommended. **The tip of the iron must be kept clean at all times and well-tinned.**

Solder

For many years leaded solder was the most common type of solder used by the electronics industry, but it is now being replaced by lead-free solder for health reasons. This kit contains lead-free solder, which contains 99.3% tin, 0.7% copper, and has a rosin-flux core.

Lead-free solder is different from lead solder: It has a higher melting point than lead solder, so you need higher temperature for the solder to flow properly. Recommended tip temperature is approximately 700°F; higher temperatures improve solder flow but accelerate tip decay. An increase in soldering time may be required to achieve good results. Soldering iron tips wear out faster since lead-free solders are more corrosive and the higher soldering temperatures accelerate corrosion, so proper tip care is important. The solder joint finish will look slightly duller with lead-free solders.

Use these procedures to increase the life of your soldering iron tip when using lead-free solder:

- Keep the iron tinned at all times.
- Use the correct tip size for best heat transfer. The conical tip is the most commonly used.
- Turn off iron when not in use or reduce temperature setting when using a soldering station.
- Tips should be cleaned frequently to remove oxidation before it becomes impossible to remove. Use Dry Tip Cleaner (Elenco® #SH-1025) or Tip Cleaner (Elenco® #TTC1). If you use a sponge to clean your tip, then use distilled water (tap water has impurities that accelerate corrosion).

Safety Procedures



- **Always wear safety glasses or safety goggles to protect your eyes when working with tools or soldering iron, and during all phases of testing.**
- Be sure there is **adequate ventilation** when soldering.
- Locate soldering iron in an area where you do not have to go around it or reach over it. Keep it in a safe area away from the reach of children.
- **Do not hold solder in your mouth.** Solder is a toxic substance. Wash hands thoroughly after handling solder.

Assemble Components

In all of the following assembly steps, the components must be installed on the top side of the PC board unless otherwise indicated. The top legend shows where each component goes. The leads pass through the corresponding holes in the board and are soldered on the foil side.
Use only rosin core solder.

DO NOT USE ACID CORE SOLDER!

What Good Soldering Looks Like

A good solder connection should be bright, shiny, smooth, and uniformly flowed over all surfaces.

1. Solder all components from the copper foil side only. Push the soldering iron tip against both the lead and the circuit board foil.

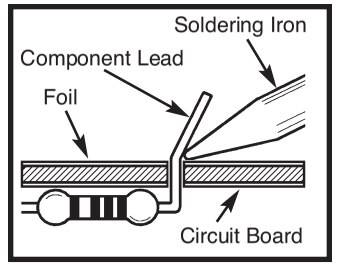

2. Apply a small amount of solder to the iron tip. This allows the heat to leave the iron and onto the foil. Immediately apply solder to the opposite side of the connection, away from the iron. Allow the heated component and the circuit foil to melt the solder.

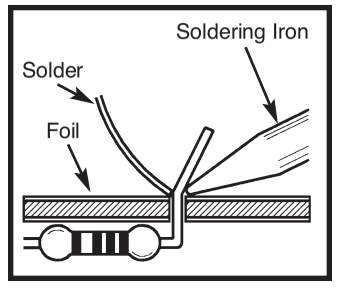

3. Allow the solder to flow around the connection. Then, remove the solder and the iron and let the connection cool. The solder should have flowed smoothly and not lump around the wire lead.

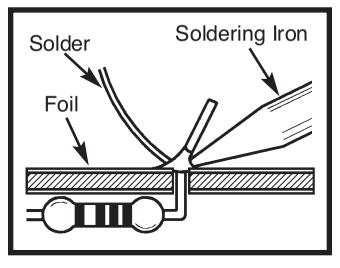

4. Here is what a good solder connection looks like.

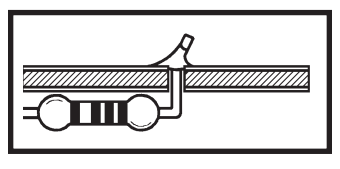

Types of Poor Soldering Connections

1. **Insufficient heat** - the solder will not flow onto the lead as shown.

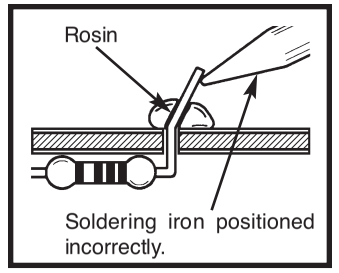

2. **Insufficient solder** - let the solder flow over the connection until it is covered.
Use just enough solder to cover the connection.

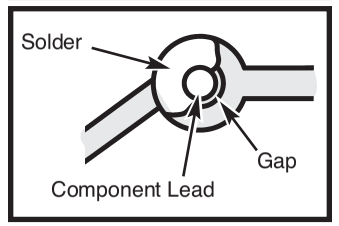

3. **Excessive solder** - could make connections that you did not intend to between adjacent foil areas or terminals.

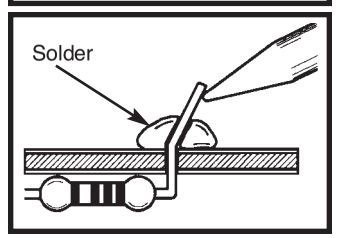

4. **Solder bridges** - occur when solder runs between circuit paths and creates a short circuit. This is usually caused by using too much solder.
To correct this, simply drag your soldering iron across the solder bridge as shown.

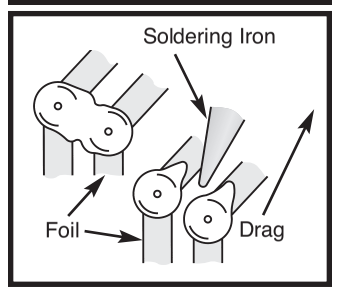

CIRCUIT DESCRIPTION - DIGITAL SECTION

THE DATA SWITCHES

There are eight data switches labeled SW1 through SW8. The circuit is very simple. To perform the desired functions, there is a double throw double pole switch, wired as a single pole double throw. One end is connected to the 5V, the other to ground and the center lug is connected to the output.

THE LOGIC SWITCHES

The logic switches are also DPDT switches wired as SPST switches. The logic switches perform the same function as the data switches. That is, they produce high or low states. But there is one big difference. When switching the data switches, many pulses may be produced due to bouncing of the contacts.

In the logic switches, only one pulse is produced at the IC output no matter how many times the contacts bounce. This is extremely important if you are producing pulses for counting circuits. Figure R shows the wiring of the logic switch. The two NAND gates are connected so that when the X input is grounded, the X output goes high. Opening and closing the ground at X will not change the output. Only when $\overline{X}$ is grounded will the output change to low. Thus, only one output change is produced with one movement of the X switch. There are two outputs from each logic switch, $\overline{X}$ and X or $\overline{Y}$ and Y.

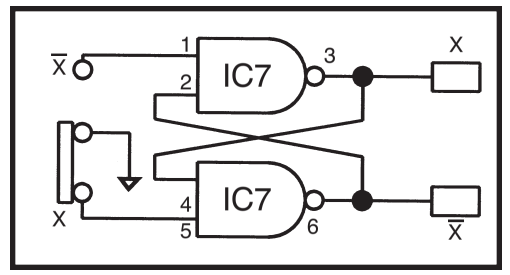

Figure R

THE LOGIC INDICATORS

There are eight logic indicators. Figure S shows the circuit. It consists of a 74HC04 IC. When the input is over 2.8V, the output of the IC will be low, drawing current through the LED indicator. The 120Ω resistor limits the current in the LED to less than 20mA. When there is no connection to the input of the logic indicators, the two 100kΩ resistor bias the input to GND. This insures that the LED will be off.

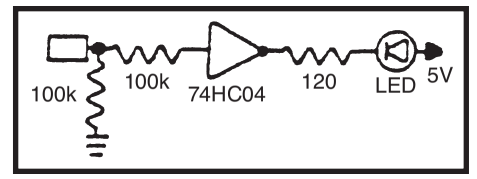

Figure S

INSTALL COMPLETED UNIT INTO CASE

- ❒ Place the strain relief onto the line cord as shown in Figure N.
- ❒ Squeeze the two sections together with pliers as shown in Figure O. Then, insert the strain relief into the hole.
- ❒ Lay the trainer inside of the case as shown in Figure P.
- ❒ Align the holes in the bottom case with those in the trainer and secure it into place with four #6 x 1/2" AB screws and four #6 washer as shown in Figure Q.

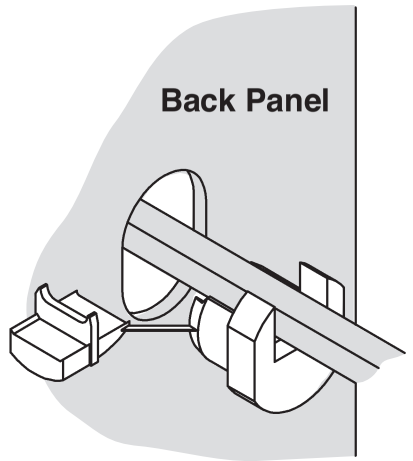

Figure N

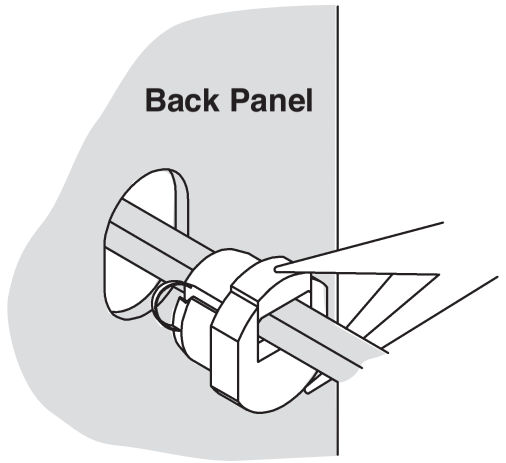

Figure O

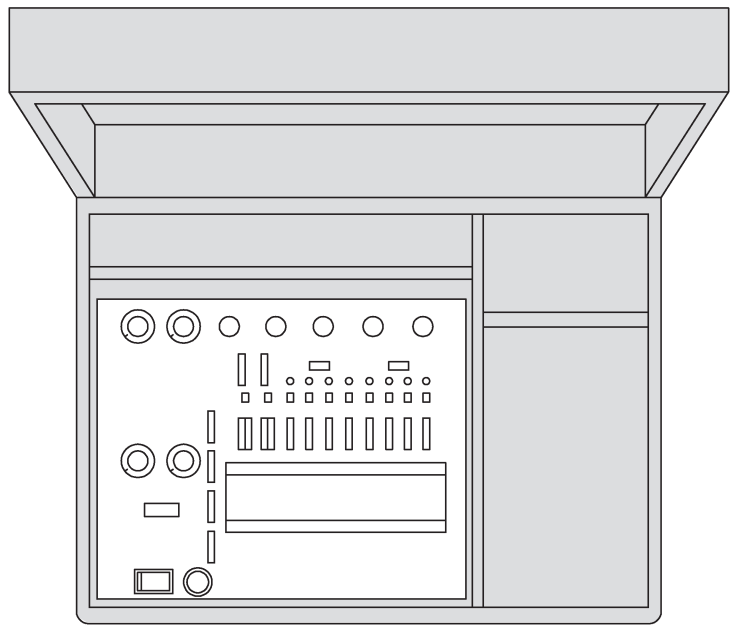

Figure P

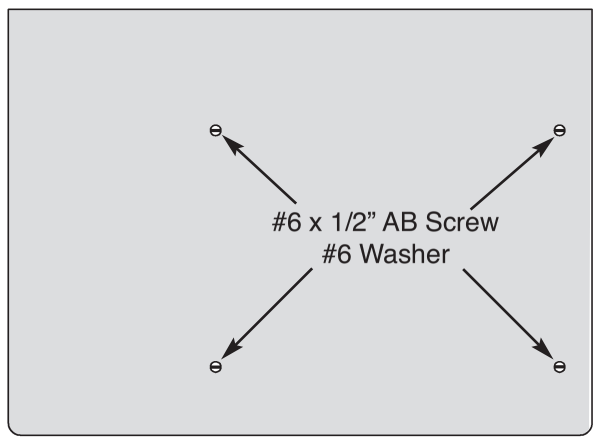

Figure Q

INTRODUCTION

The XK-700K Digital/Analog Trainer is divided into four separate kits: BB-700-A, PS-700-B, AN-700-C and DG-700D. Each bag of parts is clearly identified. Open only the kit called for in your procedure. DO NOT open any other bag at this time. The first kit is the BB-700-A which contains only the breadboard. The breadboard will be assembled to the front panel of the trainer during the assembly of the PS-700-B Power Supply. Read your instructions carefully.

Power Supply

The XK-700K has five built-in power supplies which will satify most design needs. This includes two variable power supplies giving up to +20 volts and –20 volts at 0.5 amp. Below 15V, the current available is 1 amp. Three fixed power supplies give you +12VDC, –12VDC or +5VDC at 1 amp each. These fixed voltages are the most commonly used voltages for design work. All supplies are regulated to within 150mV. This means that you can increase the current draw from no load to 0.5 amp and the voltage will change less than 150mV. All supplies are also short circuit protected by using integrated circuit regulator devices.

Analog Trainer Section Function Generator

The analog trainer contains a complete function generator capable of producing sine, square and triangle waveforms. The frequency of the generator is continuously variable from one hertz to over 100,000 hertz in five steps. A fine tuning control makes the selection of any frequency easy. The output voltage amplitude is variable between 0 to 15Vpp. The output impedance is approximately 330 ohms.

Digital Trainer Section

The digital trainer has the necessary functions to do your digital experiments. They consist of a clock generator, two no-bounce switches, eight LED indicator lamps and eight data switches.

POWER SUPPLY SPECIFICATIONS

Power Supplies:

- 0V to 20VDC @ 0.5 amp (0V to 15V @ 1 amp).
- 0V to -20VDC @ 0.5 amp (0V to –15V @ 1 amp).
- +12V ±5% @ 1 amp.
- –12V ±5% @ 1 amp.
- +5V ±5% @ 1 amp.
- 30VAC center tapped @ 1 amp.
- Load regulation - all DC supplies less than 0.2V no load to 0.5A.
- Line regulation - all DC supplies less than 0.2V 105 to 135V.
- Hum and ripple - all DC supplies less than 0.01V RMS.
- Short protection - all DC supplies-internal IC thermal cutoff.
- Fuse 1.25A 250V.

Variable Resistance (undedicated):

- 1kΩ Potentiometer
- 100kΩ Potentiometer

USERS DESCRIPTION OF FRONT PANEL CONTROLS

1) **On/Off Switch** - Allows power to be applied to all outputs. Switch will light when on.
2) **Fuse Holder** - Easy access for replacement of 1.25A fuse.
3) **Power Output Terminals** - This provides 30VAC center tapped at 15 VAC; also provides output terminal for positive and negative variable voltages.
4) **Variable Positive Voltage Control** - Varies positive voltage from 0V to 20V at indicated output connector pin.
5) **Variable Negative Voltage Control** - Varies negative voltage from 0V to –20V at indicated output connector pin.
6) **Power Output Bredblox** - Output terminals for GND, –12, +12, and +5.
7) Output terminals for 1k and 100k undedicated potentiometers.
8) 1kΩ undedicated potentiometer.
9) 100kΩ undedicated potentiometer.

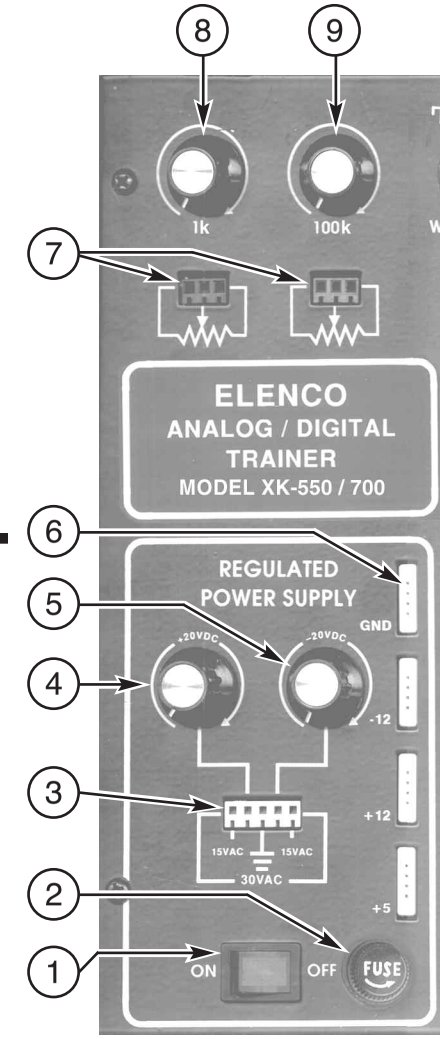

INSTALL COMPONENTS TO PC BOARD

Start Here

☐ S1 - 5-pin connector (see Figure A)

☐ L-bracket (see Figure B)

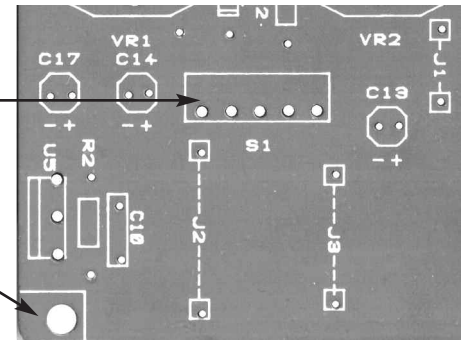

Bottom left corner of PC board

☐ VR4 - 100kΩ pot
☐ VR3 - 1kΩ pot (see Figure C)

☐ S3 - 3-pin connector
☐ S2 - 3-pin connector (see Figure A)

☐ L-bracket (see Figure B)

☐ C8 - 0.1μF mylar (104) (see Figure D)

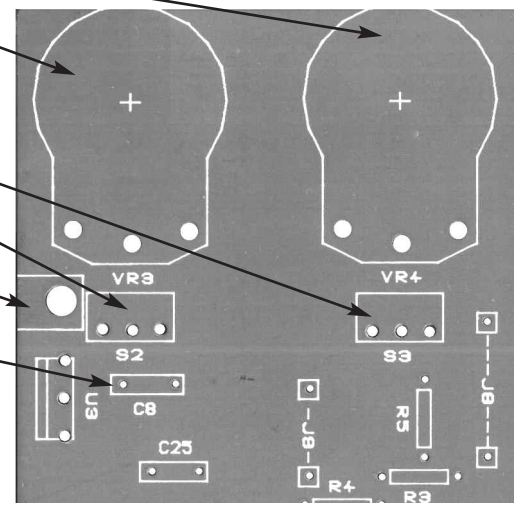

Top left corner of PC board

Figure A

Mount the connector as shown and solder the pins of the connector.

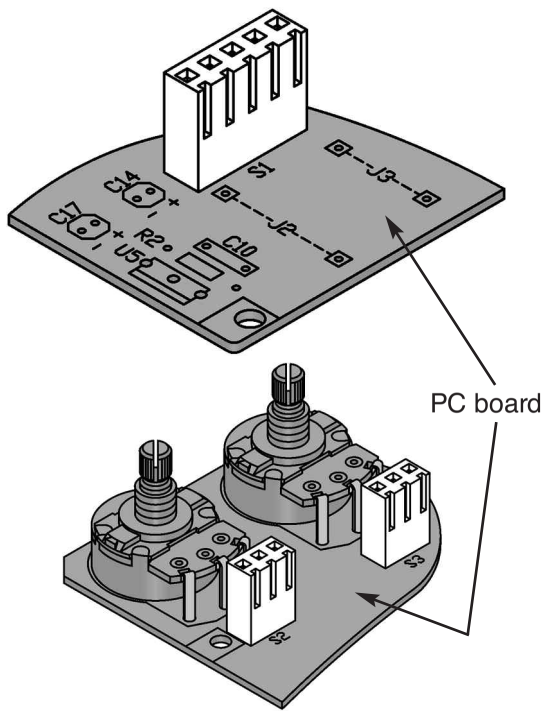

Figure B

Note: One side of the bracket is longer. Mount this side to the PC board. Mount the bracket to the top legend side of the PC board with a 4-40 x 1/4" screw and fiber washer.

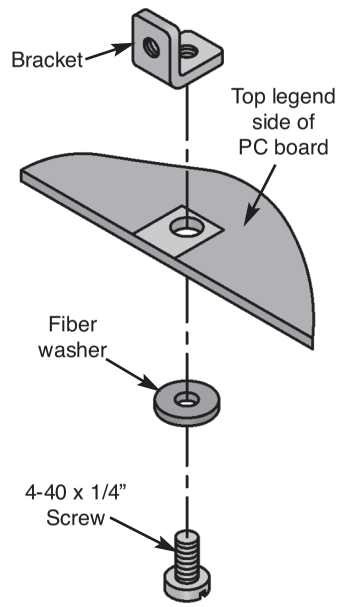

Figure C

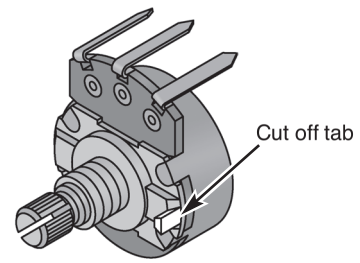

Mount down flush with PC board. The value may be marked on the on the back side of pot.

Cut off excess lead length after soldering.

Figure D

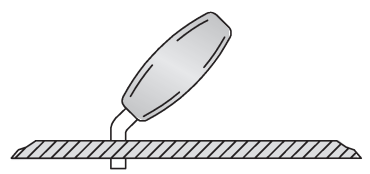

Bend the capacitor at a 45° angle before soldering. Cut off excess leads.

FINAL ASSEMBLY

❒ Fasten the front panel in place with four #6 x 3/8" thread cutting screws, as shown in Figure I.

❒ Fasten the PC board to the spacer on the front panel with a fiber washer and a 4-40 x 1/4" screw (from Power Supply Section) from the foil side of the PC board, in the location shown in Figure J.

❒ Fasten the pots to the front panel with an 8mm washer and a 7mm nut, as shown in Figure I.

❒ Turn the shafts on the two switches fully counter-clockwise. Push the knobs onto the shafts so that the line on the knob is in line with the "Squarewave" on the waveform control and "10" on the Coarse Frequency control (see Figure K).
If the knobs are loose on the shafts, insert a screwdriver into the slot and expand the slot slightly (see Figure M).

Figure I

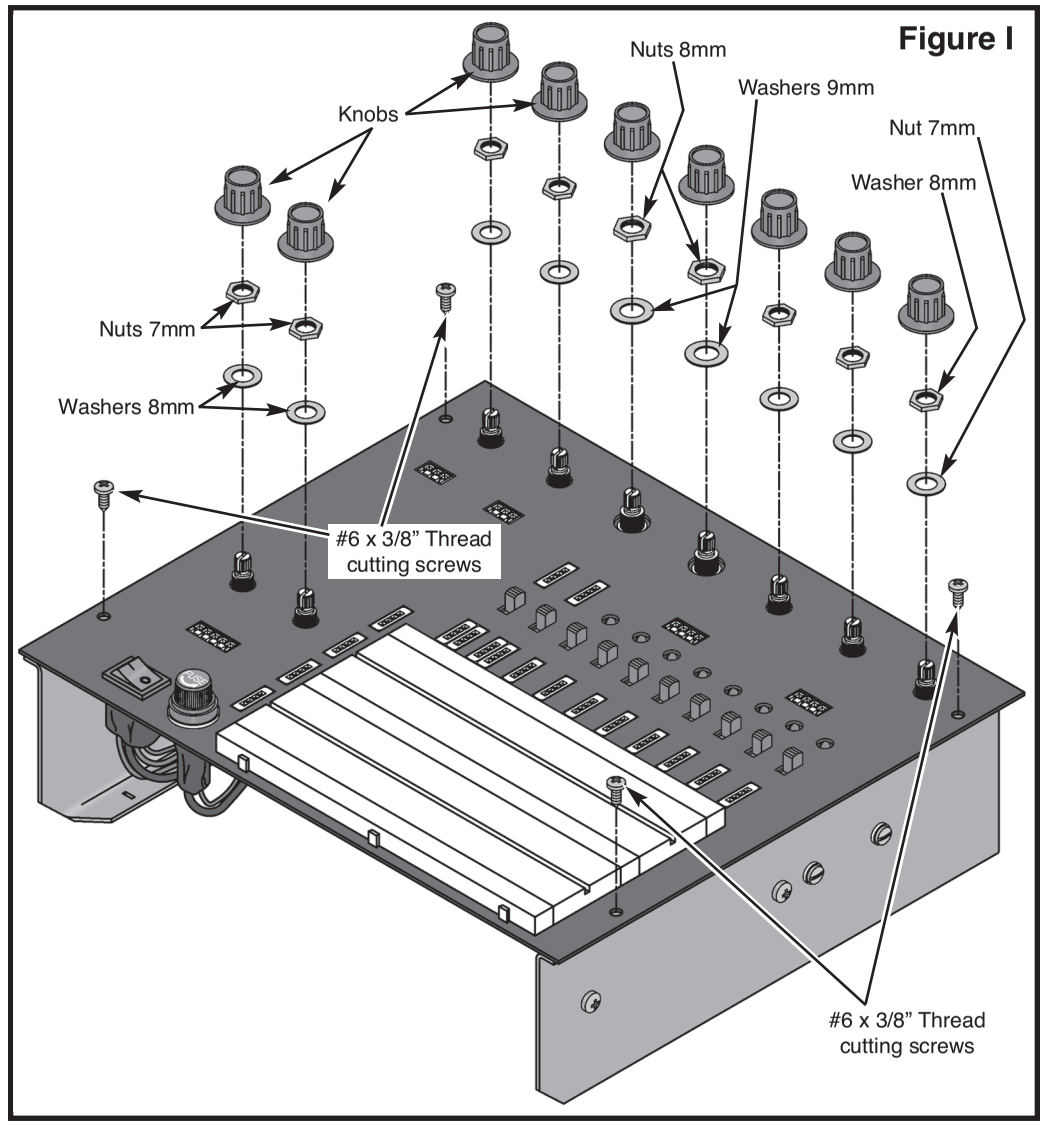

❒ Turn the shafts on the pots fully counter-clockwise. Push the knobs onto the shafts so that the line on the knob is in line with the end of the circle on the front panel, as shown in Figure L.
If the knobs are loose on the shafts, insert a screwdriver into the slot and expand the slot slightly (see Figure M).

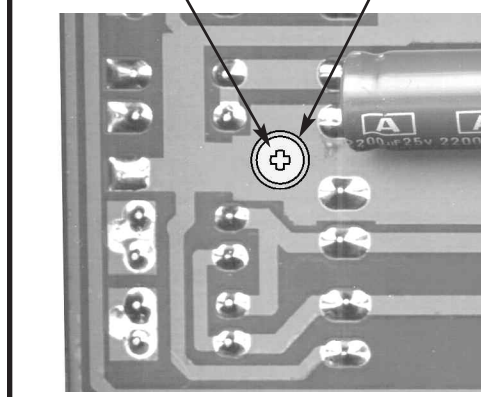

Figure J

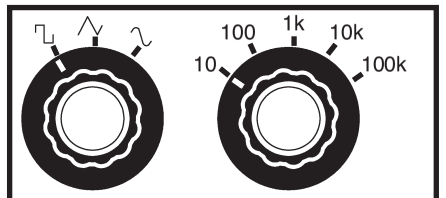

Figure K



Figure L

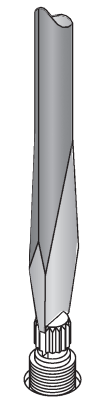

Figure M

TESTING THE DIGITAL SECTION

TESTING THE LOGIC INDICATOR FUNCTION

There are eight logic indicators which you will be checking out. Put a wire to the 5V power supply and touch the “A” logic indicator test pin. The “A” LED should light up. Remove the wire and the LED should go out. Do the same for the B, C, D, E, F, G and H pins.

TESTING THE LOGIC SWITCHES

There are two logic switches and four conditions to be checked out. Connect a wire from the “X” test pin to the “A” logic indicator test pin. Connect another wire to the “$\overline{X}$” test pin to the “B” test pin.

Apply power and note that the “A” LED indicator should be lit when the logic switch is in the “X” position and the “B” LED should light and the “A” LED not light. Check the “Y” logic switch in the same manner.

TESTING THE DATA SWITCHES

There are eight data switches to be checked. The output of the switches are 5V or ground depending on the position. Connect a wire to the SW1 test pin and the “A” test pin. The “A” LED should light when the switch is placed toward the top of the case. Repeat the same test on SW2, SW3, SW4, SW5, SW6, SW7 and SW8.

❒ **Unplug the unit from the AC outlet.**

DIGITAL TROUBLESHOOTING CHART

PROBLEM	POSSIBLE CAUSE
No +5V on data switch terminals.	1. Measure for a DC voltage of +5V across R15. A. Check R15, J19, J23 and J13. B. Switch shorted to ground.
LED doesn’t light	1. Check that the LED is in correctly. 2. Check the input and output resistors. 3. Measure input for +5V and output at ground. A. Short to ground or defective IC.
LED always on	1. Measure for zero voltage voltage at input pin. A. Pin shorted or defective IC 2. Measure voltage to output pin for +5V. A. Pin shorted or defective IC.
Logic switch terminal always high	1. Check that input resistor is grounded. A. Bad ground connection or switch. 2. Measure for +5V on R16 - R19. A. Check resistor. 3. Defective IC.

INSTALL COMPONENTS TO PC BOARD

Start Here

- ☐ R1 - 120Ω 5% 1/4W resistor (brown-red-brown-gold)
- ☐ J28 - Jumper wire (see Figure F)
- ☐ J6 - Jumper wire (see Figure F)
- ☐ D12 - 1N4001 diode
  ☐ D11 - 1N4001 diode (see Figure G)
- ☐ C14 - 100µF 25V lytic
  ☐ C17 - 100µF 25V lytic (see Figure E)
- ☐ R2 - 120Ω 5% 1/4W resistor (brown-red-brown-gold)
- ☐ J2 - Jumper wire (see Figure F)
- ☐ J3 - Jumper wire (see Figure F)

Bottom left corner of PC board

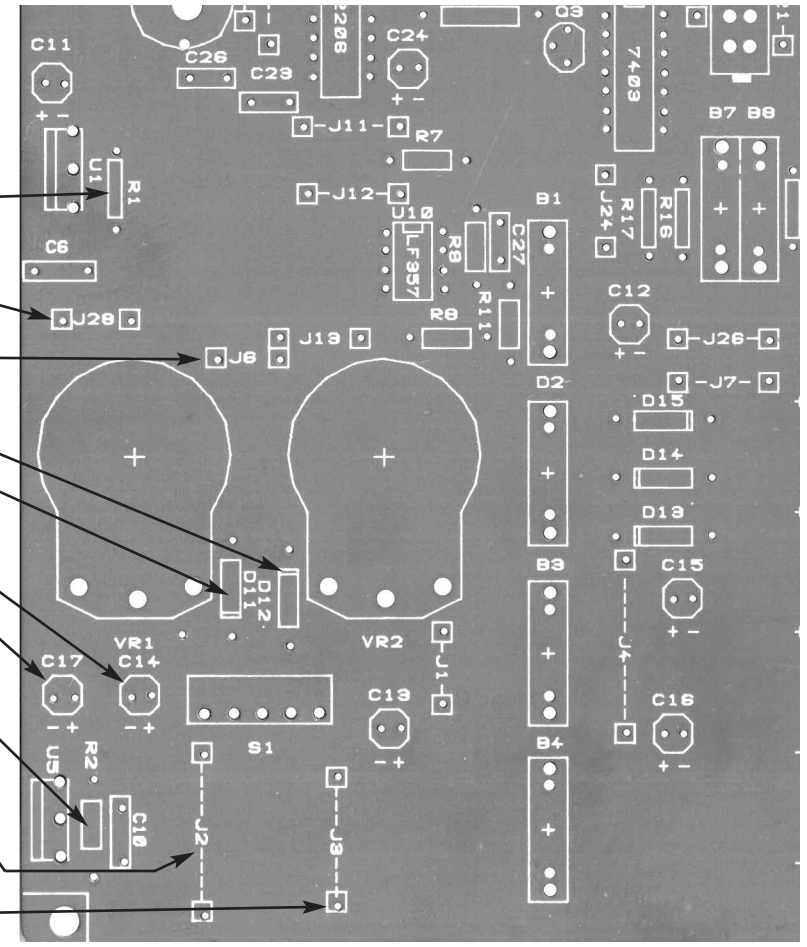

Figure E

These capacitors are polarized. Be sure to mount them with the “+” lead in the correct hole as marked on the PC board. Mount the capacitor lying flat on the PC board as shown below.

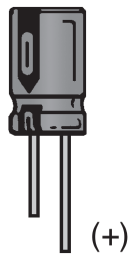

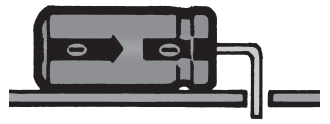

Warning: If the capacitor is connected with incorrect polarity, it may heat up and either leak or cause the capacitor to explode.

Figure F

Cut a piece of the #22 bare wire long enough so that 1/4” of wire passes through each hole in the PC board after the wire is formed.



Figure G

Diodes have polarity. Mount them with the band as shown on the top legend.

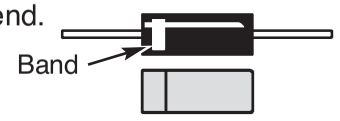

INSTALL COMPONENTS TO PC BOARD

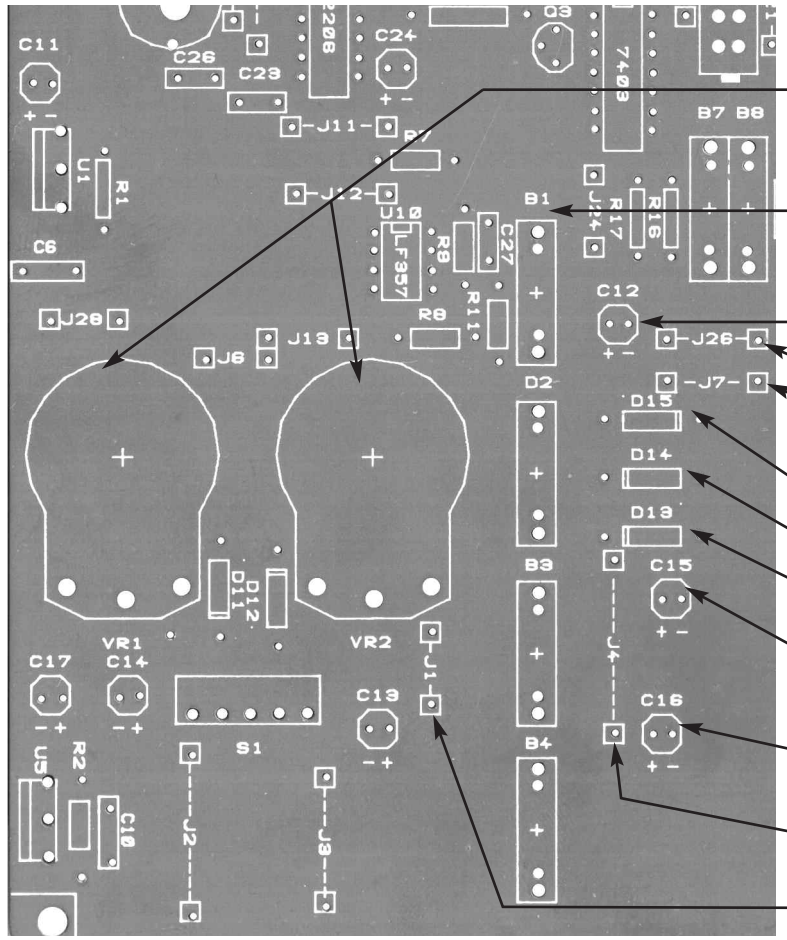

Bottom left corner of PC board

Start Here

- ☐ VR1 - 2kΩ pot
- ☐ VR2 - 2kΩ pot
  (see Figure H)

- ☐ B1 - 4-pin bredblox
- ☐ B2 - 4-pin bredblox
- ☐ B3 - 4-pin bredblox
- ☐ B4 - 4-pin bredblox
  (see Figure I)

- ☐ C12 - 100µF 25V lytic
  (see Figure E)

- ☐ J26 - Jumper wire
- ☐ J7 - Jumper wire
  (see Figure F)

- ☐ D15 - 1N4001 diode
- ☐ D14 - 1N4001 diode
- ☐ D13 - 1N4001 diode
  (see Figure G)

- ☐ C15 - 100µF 25V lytic
- ☐ C16 - 100µF 25V lytic
  (see Figure E)

- ☐ J4 - Jumper wire
- ☐ J1 - Jumper wire
  (see Figure F)

- ☐ R50 - 1.2kΩ 1/2W resistor
- ☐ R51 - 1.2kΩ 1/2W resistor
  (red-red-red-gold)
  (see Figure H)

Figure H

1. VR1 and VR2 - Before installing the pot into the PC board, bend the center lead over to the right lead and solder. Cut off the excess leads.

2. Install the pots flush with the PC board. The value may be marked on the back of the pot. Cut off the excess lead length after soldering.

3. Place the 3/4" tubing over one lead of the 1.2kΩ 5% 1/2W (red-red-red-gold) resistor. Postion the resistor as shown. Solder the resistor from the bottom hole of C10 to the right lead of VR1 as shown.

   Solder a 1.2kΩ 5% 1/2W (red-red-red-gold) resistor from jumper J1 to the right lead of VR2 as shown.

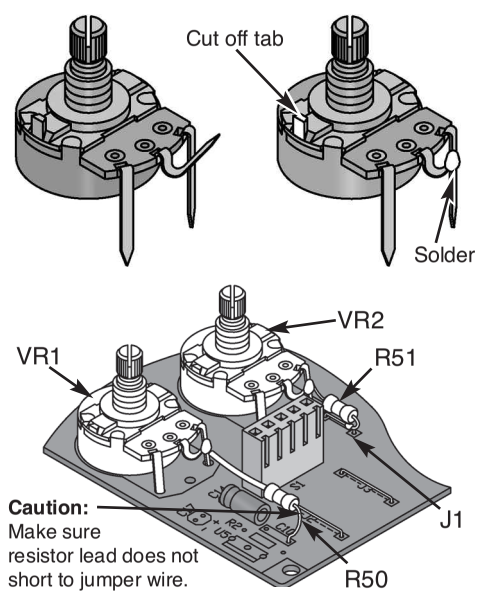

Figure I

Hold the breadblock down flush to the PC board from the top legend side and solder the metal pins in place. Then, melt the plastic pins with your soldering iron to hold the plastic blocks in place, as shown.

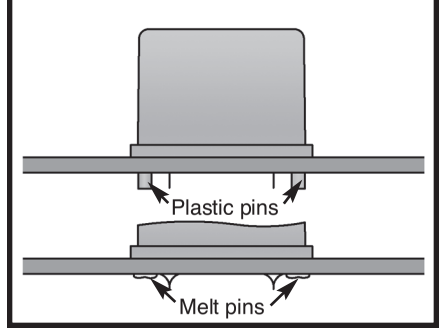

VOLTAGE ANALYSIS OF DIGITAL SECTION

Plug the power supply into a 117 volt power source. **The values given below are approximate.**

From	To	Switch Position	Volts	Volts Measured
X	GND	In up position	5V	
$\overline{X}$	GND	In up position	less than 1V	
Y	GND	In up position	5V	
$\overline{Y}$	GND	In up position	less than 1V	
SW1	GND	In up position	5V	
SW2	GND	In up position	5V	
SW3	GND	In up position	5V	
SW4	GND	In up position	5V	
SW5	GND	In up position	5V	
SW6	GND	In up position	5V	
SW7	GND	In up position	5V	
SW8	GND	In up position	5V	
X	GND	In down position	less than 1V	
$\overline{X}$	GND	In down position	5V	
Y	GND	In down position	less than 1V	
$\overline{Y}$	GND	In down position	5V	
SW1	GND	In down position	less than 1V	
SW2	GND	In down position	less than 1V	
SW3	GND	In down position	less than 1V	
SW4	GND	In down position	less than 1V	
SW5	GND	In down position	less than 1V	
SW6	GND	In down position	less than 1V	
SW7	GND	In down position	less than 1V	
SW8	GND	In down position	less than 1V	

High Positions



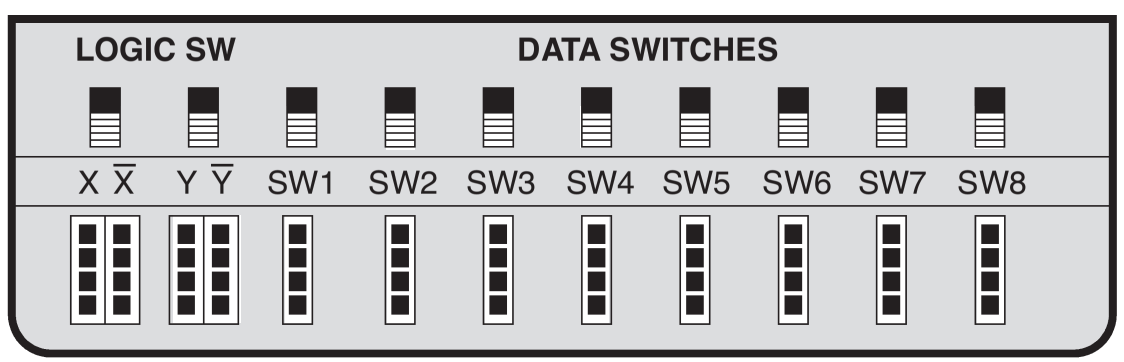

RESISTANCE ANALYSIS OF DIGITAL SECTION

Place the top panel onto the unit. Static testing of the digital section circuits. Do not plug the power supply into a 117 volt power source until all of the resistance readings check out. **The values given below are approximate.**

From	To	Switch Position	Ohms	Resistance Measured
SW1	GND	In down position	less than 1Ω	
SW2	GND	In down position	less than 1Ω	
SW3	GND	In down position	less than 1Ω	
SW4	GND	In down position	less than 1Ω	
SW5	GND	In down position	less than 1Ω	
SW6	GND	In down position	less than 1Ω	
SW7	GND	In down position	less than 1Ω	
SW8	GND	In down position	less than 1Ω	
SW1	GND	In up position	greater than 3kΩ	
SW2	GND	In up position	greater than 3kΩ	
SW3	GND	In up position	greater than 3kΩ	
SW4	GND	In up position	greater than 3kΩ	
SW5	GND	In up position	greater than 3kΩ	
SW6	GND	In up position	greater than 3kΩ	
SW7	GND	In up position	greater than 3kΩ	
SW8	GND	In up position	greater than 3kΩ	
SW1	+5V	In up position	less than 300Ω	
SW2	+5V	In up position	less than 300Ω	
SW3	+5V	In up position	less than 300Ω	
SW4	+5V	In up position	less than 300Ω	
SW5	+5V	In up position	less than 300Ω	
SW6	+5V	In up position	less than 300Ω	
SW7	+5V	In up position	less than 300Ω	
SW8	+5V	In up position	less than 300Ω	

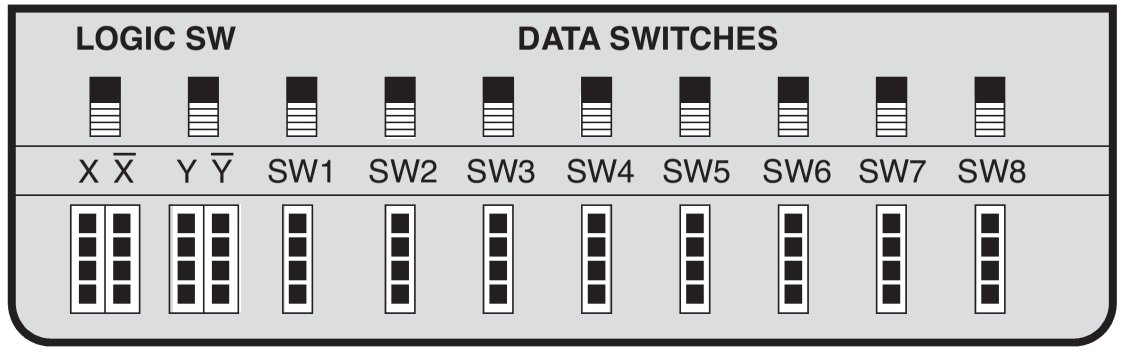

INSTALL COMPONENTS TO PC BOARD

Bottom right corner of PC board

Start Here

- ☐ C2 - 1,000µF 35V lytic
- ☐ C4 - 1,000µF 35V lytic
- ☐ C1 - 1,000µF 35V lytic
- ☐ C5 - 1,000µF 35V lytic

(see Figure J)

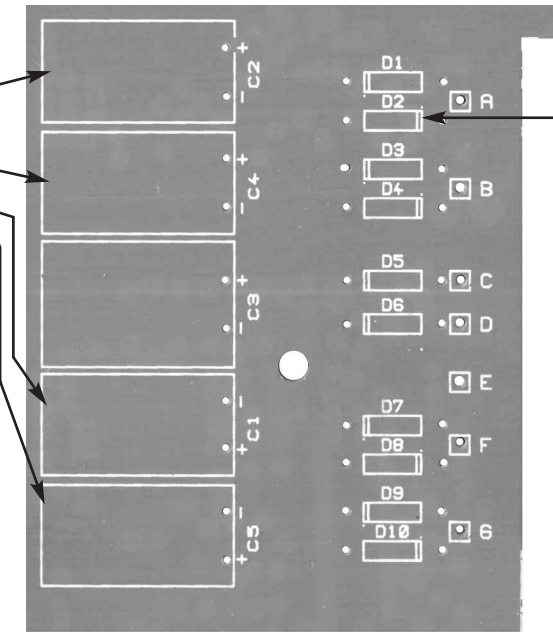

Continue

- ☐ D1 - 1N4001 diode
- ☐ D2 - 1N4001 diode
- ☐ D3 - 1N4001 diode
- ☐ D4 - 1N4001 diode
- ☐ D5 - 1N4001 diode
- ☐ D6 - 1N4001 diode
- ☐ D7 - 1N4001 diode
- ☐ D8 - 1N4001 diode
- ☐ D9 - 1N4001 diode
- ☐ D10 - 1N4001 diode

(see Figure K)

Figure J

These lytics must be mounted horizontal to the PC board. Bend the leads at right angles and then insert the leads into the PC board with the negative (–) lead and the positive (+) lead in the correct holes as marked on the PC board.

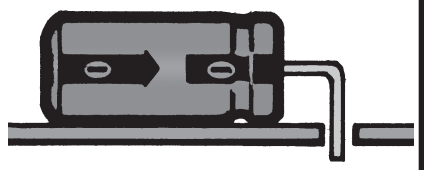

Warning: If the capacitor is connected with incorrect polarity, it may heat up and either leak or cause the capacitor to explode.

Figure K

Diodes have polarity. Mount them with the band as shown on the top legend.

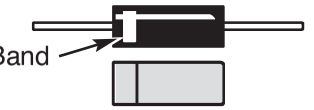

Top right corner of PC board

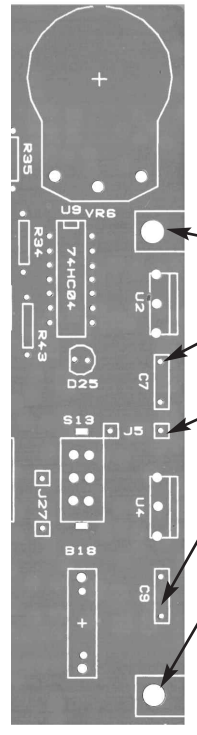

Continue

- ☐ L-bracket (see Figure B)
- ☐ C7 - .1µF mylar (104) (see Figure D)
- ☐ J5 - Jumper wire * (see Figure F)
- ☐ C9 - .1µF (104) mylar (see Figure D)
- ☐ L-bracket (see Figure B)

* Leftover wire will be used in future sections.

Start Here

- ☐ C3 - 2200µF lytic

Mount on foil side of PC board

Note the polarity

(see Figure J)

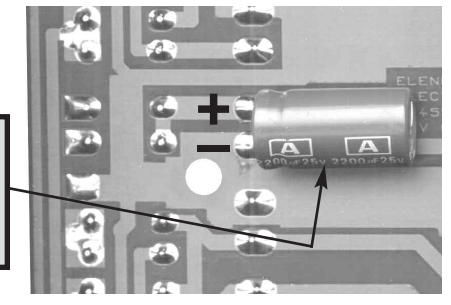

You need to install four diodes on the solder side of the PC board for VR1 and VR2.

VR1 & VR2

1. Connect the anode side of one diode to the cathode side of another by twisting the leads together as shown in Figure L.
2. Cut the untwisted lead to 1/4" length (see Figure L).
3. Tack solder the diodes across the left lead and the center hole of VR1 & VR2 as shown in Figure M. Make sure the diodes are facing in the correct position.
4. Solder the twisted leads and then cut off the excess leads.

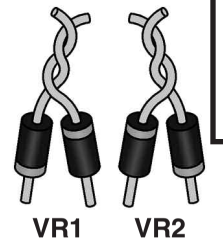

Figure L

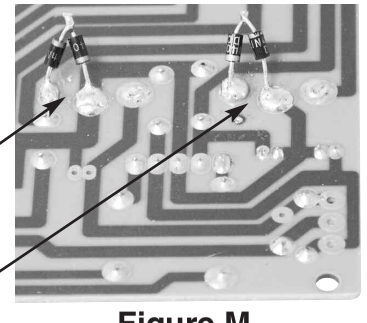

Figure M

MOUNTING THE PC BOARD

Note: The holes in the two side panels have been punched differently. Be sure that you have the correct side panel when mounting them to the PC board.

IMPORTANT: Push the PC board up as far as possible before tightening the screws, as shown in Figure O.

❒ Mount the PC board to the side panels with four 4-40 x 1/4" screws (see Figure N).
Do not tighten the screws.

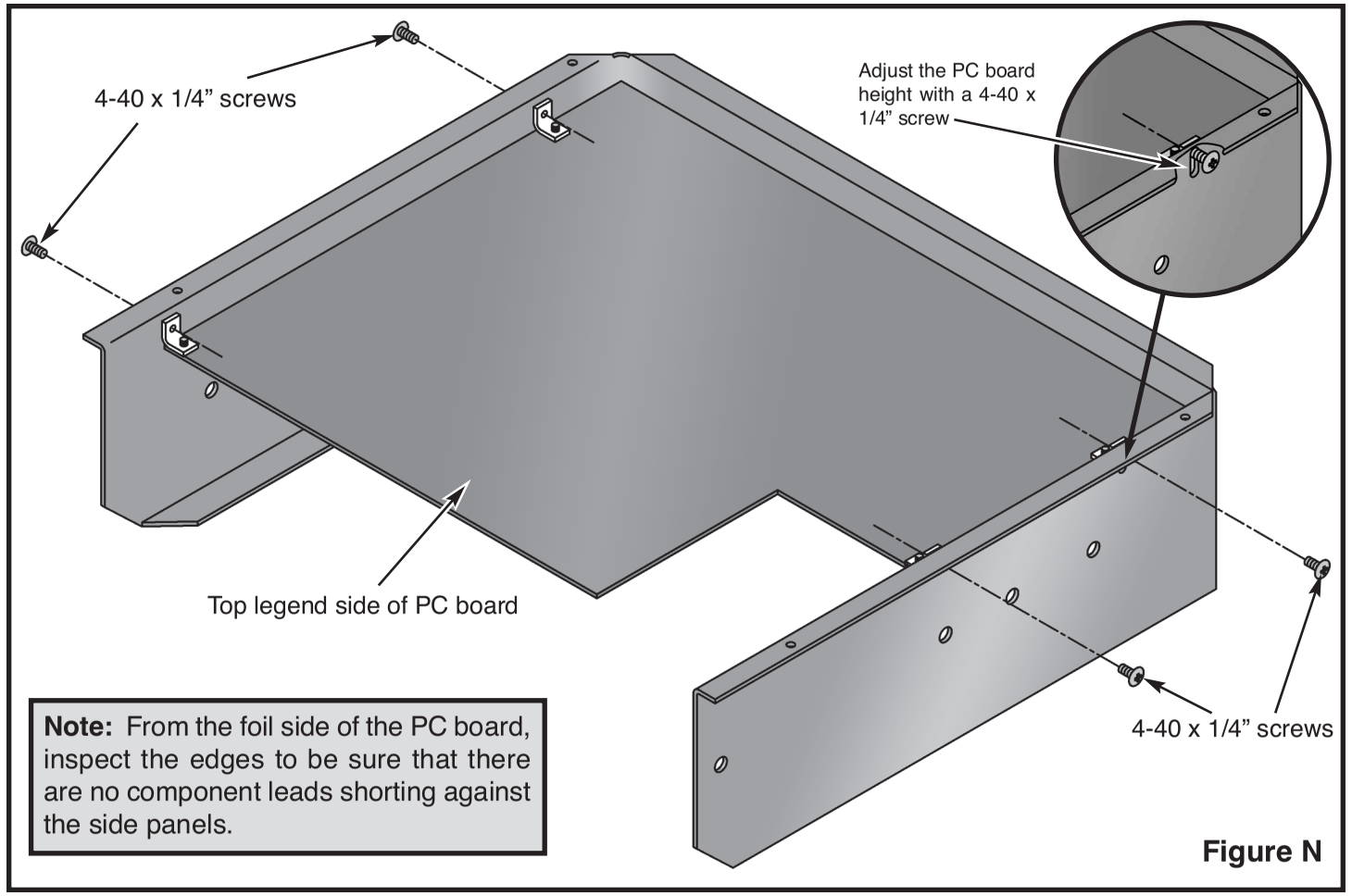

Note: From the foil side of the PC board, inspect the edges to be sure that there are no component leads shorting against the side panels.

Figure N

❒ Place the top panel onto the unit and align the components with the holes in the top panel. Push the PC board up until the components come through the top panel and tighten the screws.

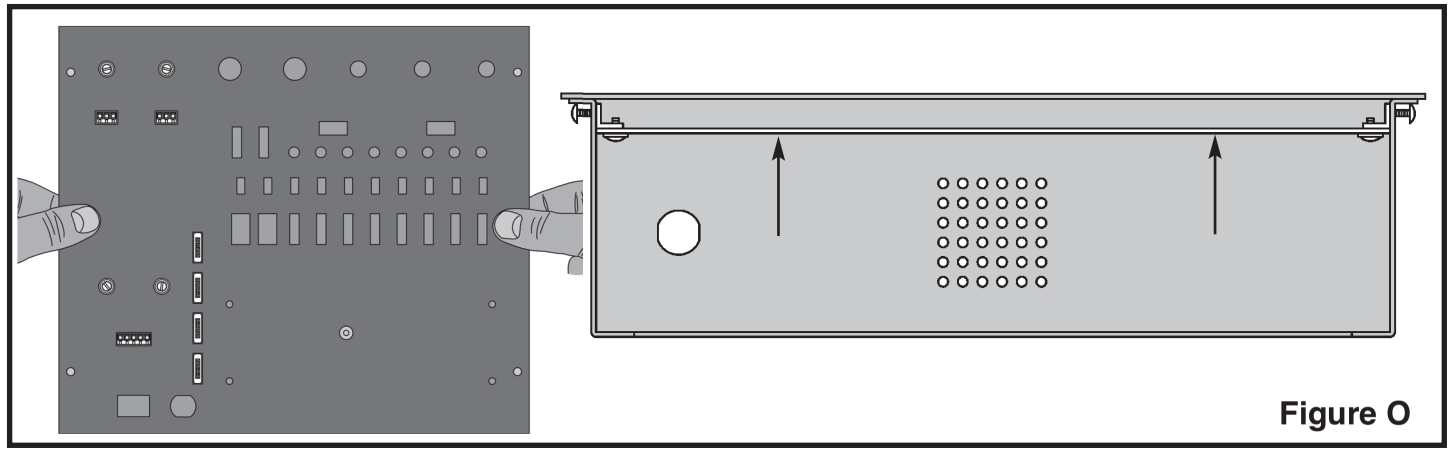

Figure O

INSTALL COMPONENTS TO PC BOARD

Start Here

☐ SW4 - Slide switch	☐ SW7 - Slide switch	☐ SW10 - Slide switch
☐ SW5 - Slide switch	☐ SW8 - Slide switch	☐ SW11 - Slide switch
☐ SW6 - Slide switch	☐ SW9 - Slide switch (see Figure F)	☐ SW12 - Slide switch
		☐ SW13 - Slide switch

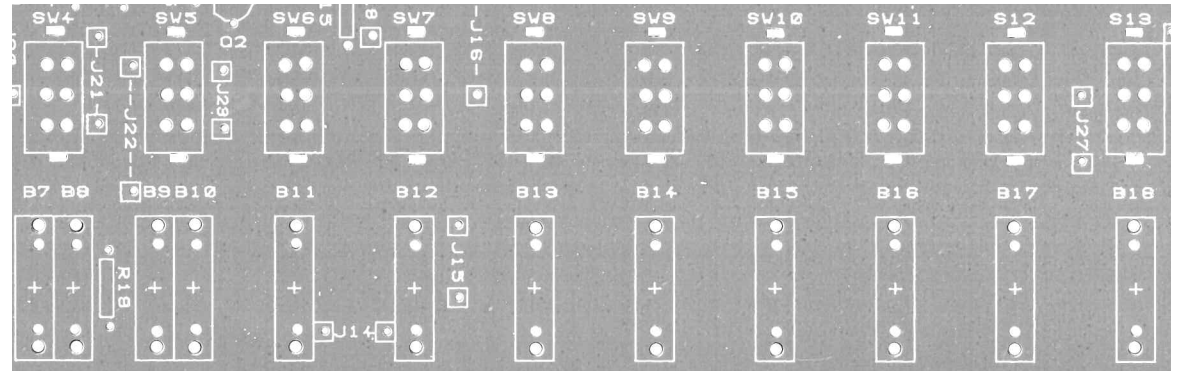

Continue

☐ B7 - 4-pin Bredblox	☐ B11 - 4-pin Bredblox	☐ B15 - 4-pin Bredblox
☐ B8 - 4-pin Bredblox	☐ B12 - 4-pin Bredblox	☐ B16 - 4-pin Bredblox
☐ B9 - 4-pin Bredblox	☐ B13 - 4-pin Bredblox	☐ B17 - 4-pin Bredblox
☐ B10 - 4-pin Bredblox	☐ B14 - 4-pin Bredblox (see Figure E)	☐ B18 - 4-pin Bredblox

Figure E

Hold the bredblox down flush to the PC board from the top legend side and solder the metal pins into place. Then, melt the plastic pins with your soldering iron to hold the plastic blocks in place as shown.

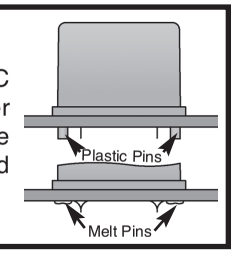

Figure F

Mount the switch onto the legend side of the PC board as shown. Flip the board over and solder the part into place. Be sure to keep the three soldered sets of leads separate as shown.

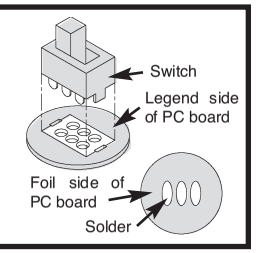

INSTALL COMPONENTS TO FRONT PANEL

❒ Interlock the breadboard to the bottom edge of the existing breadboard on the top panel as shown in Figure H. Fasten the breadboards in place with two #4 x 1/4" AB black screws from the back side of the panel. Use the holes on the 9426 breadboard as shown in Figure G. **CAUTION:** Do not remove the paper backing from the breadboard.

Figure G

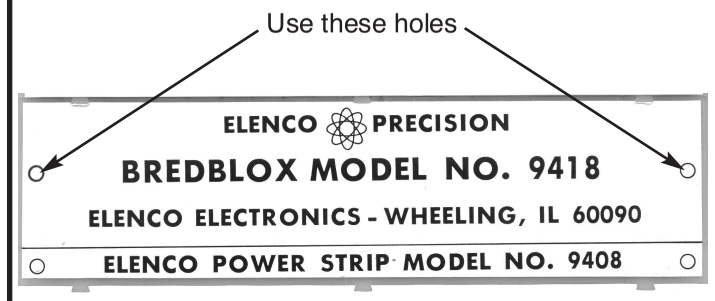

Note: The 9418 and the power strip 9408 make up the 9426 breadboard.

Figure H

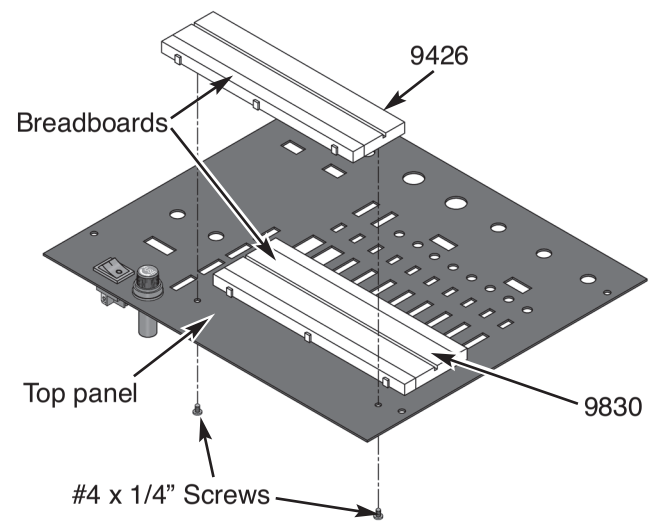

INSTALL COMPONENTS TO PC BOARD

Start Here

- ☐ U9 - IC socket 14-pin
- ☐ U9 - 74HC04 IC (see Figure D)

Continue

- ☐ U8 - 14-pin IC socket
- ☐ U8 - 74HC04 IC (see Figure D)
- ☐ J19 - Jumper Wire (see Figure C)
- ☐ R15 - 220Ω 5% 1/4W Resistor (red-red-brown-gold)
- ☐ J22 - Jumper Wire (see Figure C)
- ☐ J21 - Jumper Wire (see Figure C)
- ☐ J20 - Jumper Wire (see Figure C)
- ☐ R18 - 1kΩ 5% 1/4W Resistor (brown-black-red-gold)
- ☐ U7 - IC socket 14-pin
- ☐ U7 - 7403 IC (see Figure D)
- ☐ J24 - Jumper Wire (see Figure C)

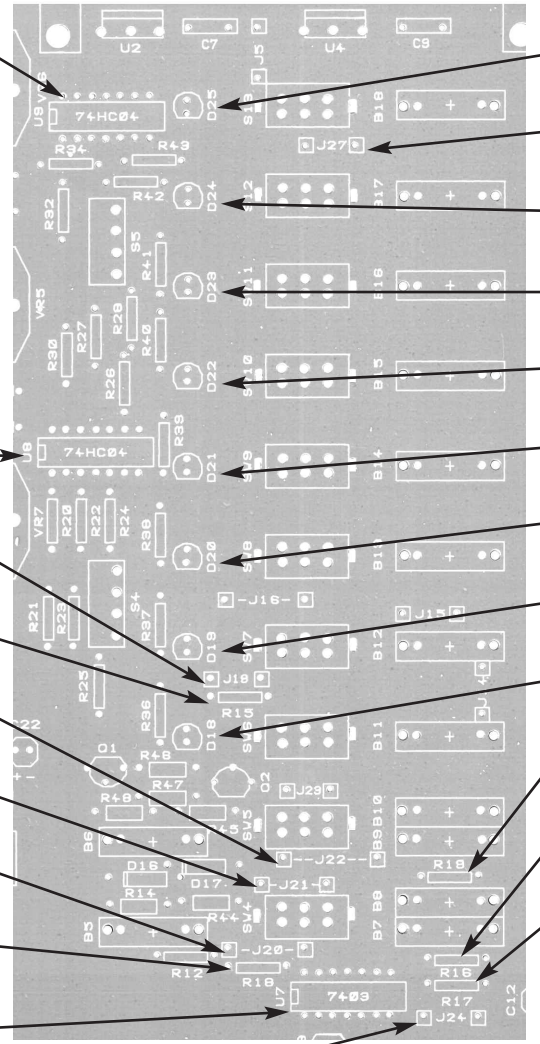

Continue

- ☐ D25 - LED and Spacer (see Figure B)
- ☐ J27 - Jumper Wire (see Figure C)
- ☐ D24 - LED and Spacer (see Figure B)
- ☐ D23 - LED and Spacer (see Figure B)
- ☐ D22 - LED and Spacer (see Figure B)
- ☐ D21 - LED and Spacer (see Figure B)
- ☐ D20 - LED and Spacer (see Figure B)
- ☐ D19 - LED and Spacer (see Figure B)
- ☐ D18 - LED and Spacer (see Figure B)
- ☐ R19 - 1kΩ 5% 1/4W Resistor (brown-black-red-gold)
- ☐ R16 - 1kΩ 5% 1/4W Resistor (brown-black-red-gold)
- ☐ R17 - 1kΩ 5% 1/4W Resistor (brown-black-red-gold)

Figure B

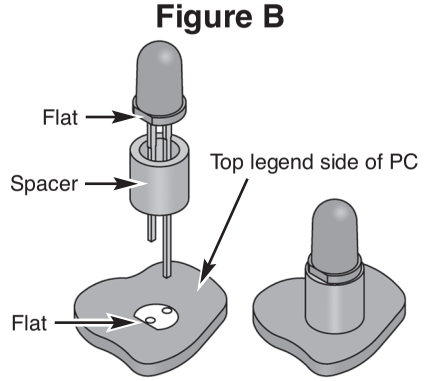

Mount spacer and LED flush to the PC board, with the flat side of the LED in the same direction as the marking on the top legend side of the PC board.

Figure C

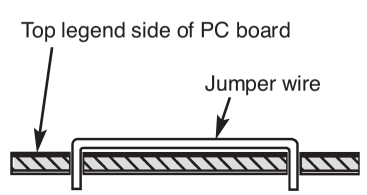

Cut a piece of bare wire long enough so that 1/4" of wire passes through each hole in the PC board after the wire is formed (provided in the second package).

Figure D

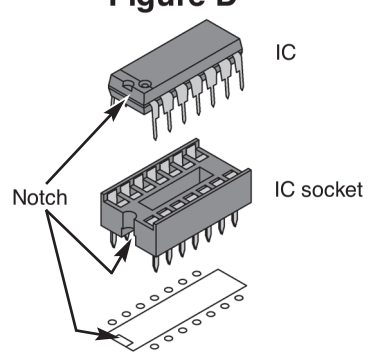

Insert the IC socket into the PC board with the notch in the direction shown on the top legend. Solder the IC socket into place. Insert the IC into the socket with the notch in the same direction as the notch on the socket.

MOUNT COMPONENTS TO THE SIDE PANELS

Mount U1, U3 and U5 to the left side panel as shown in Figure Q. Insert the pins of each IC into the holes of the PC board. Then, with the hardware shown in Figure P, attach each IC to the side panel. Solder the pins of the ICs to the PC board.

- ❒ U3 - LM7805
- ❒ U1 - LM317
- ❒ U5 - LM337

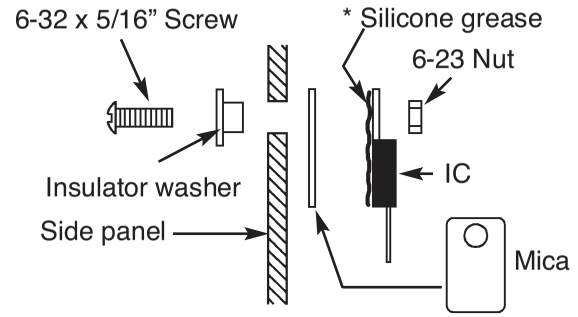

* Take a small amount of silicone grease from the packet and apply it with a toothpick onto the back of the ICs.

Figure P

Left Side

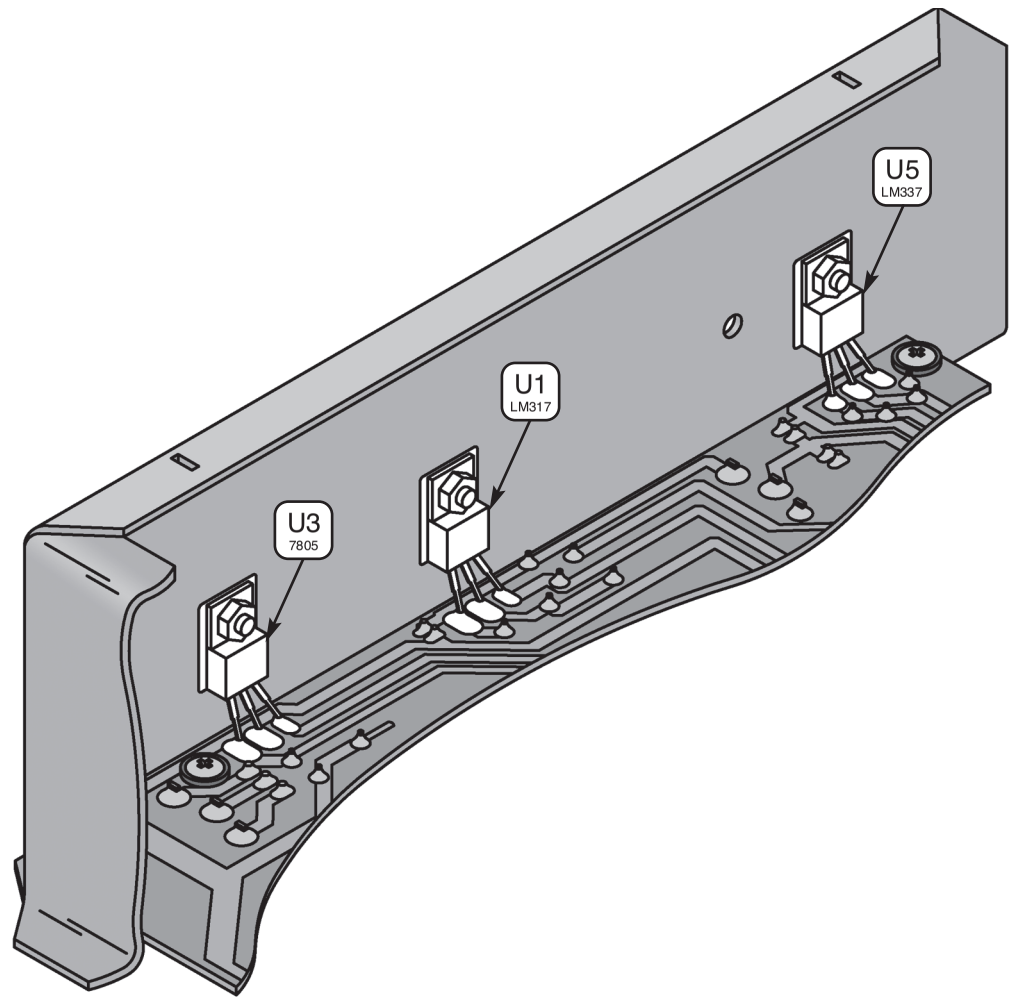

Figure Q

Mount U2 and U4 to the right side panel as shown in Figure S. Insert the pins of each IC into the holes in the PC board. Then, with the hardware shown in Figure R, attach each IC to the side panel. Solder the pins of the ICs to the PC board.

❒ U4 - LM7912

❒ U2 - LM7812

Mount the transformer with the black wires as shown in Figure S. Use the two 8-32 x 3/8" screws, #8 lockwashers, and 8-32 nuts.

❒ Transformer mounted

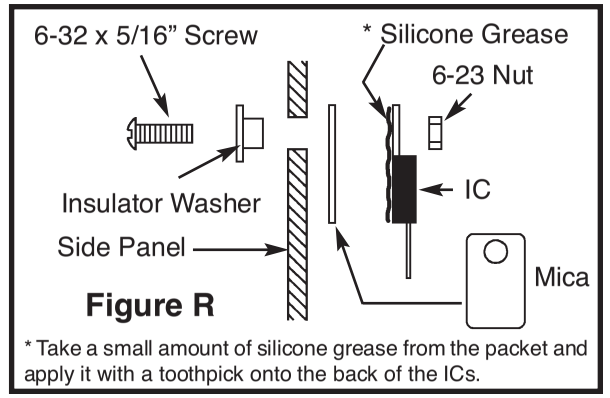

Figure R

* Take a small amount of silicone grease from the packet and apply it with a toothpick onto the back of the ICs.

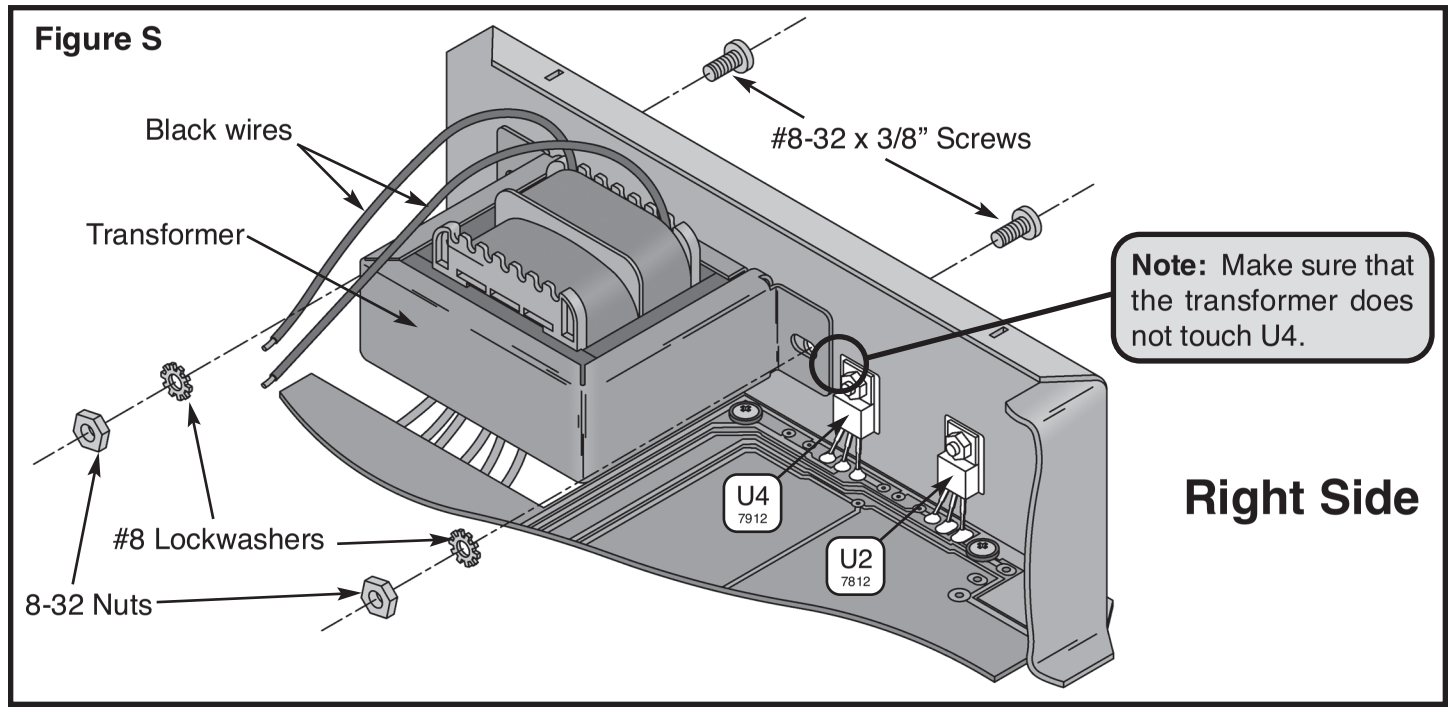

WIRE THE TRANSFORMER TO THE PC BOARD

Solder the wires to the PC board starting with the top yellow wire as shown in Figure U.

❒ Yellow wire to point F on the PC board

❒ Blue wire to point A on the PC board

❒ Red wire to point C on the PC board

❒ White wire to point E on the PC board

❒ Red wire to point D on the PC board

❒ Blue wire to point B on the PC board

❒ Yellow wire to point G on the PC board

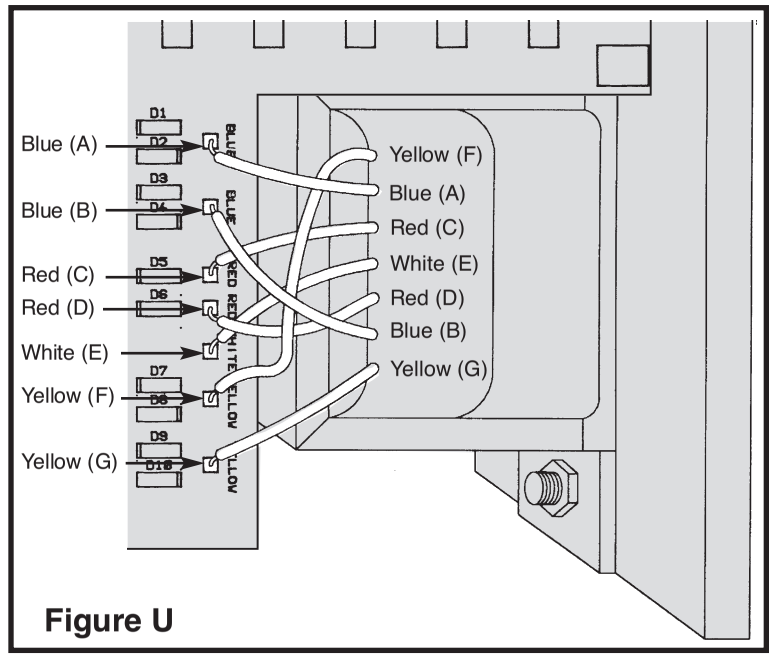

Figure U

INSTALL COMPONENTS TO PC BOARD

Start Here

☐ R43 - 120Ω 5% 1/4W Resistor (brown-red-brown-gold)

☐ R42 - 120Ω 5% 1/4W Resistor (brown-red-brown-gold)

☐ S5 - 4-pin connector (see Figure A)

☐ R41 - 120Ω 5% 1/4W Resistor (brown-red-brown-gold)

☐ R40 - 120Ω 5% 1/4W Resistor (brown-red-brown-gold)

☐ R39 - 120Ω 5% 1/4W Resistor (brown-red-brown-gold)

☐ R38 - 120Ω 5% 1/4W Resistor (brown-red-brown-gold)

☐ S4 - 4-pin connector (see Figure A)

☐ R37 - 120Ω 5% 1/4W Resistor (brown-red-brown-gold)

☐ R36 - 120Ω 5% 1/4W Resistor (brown-red-brown-gold)

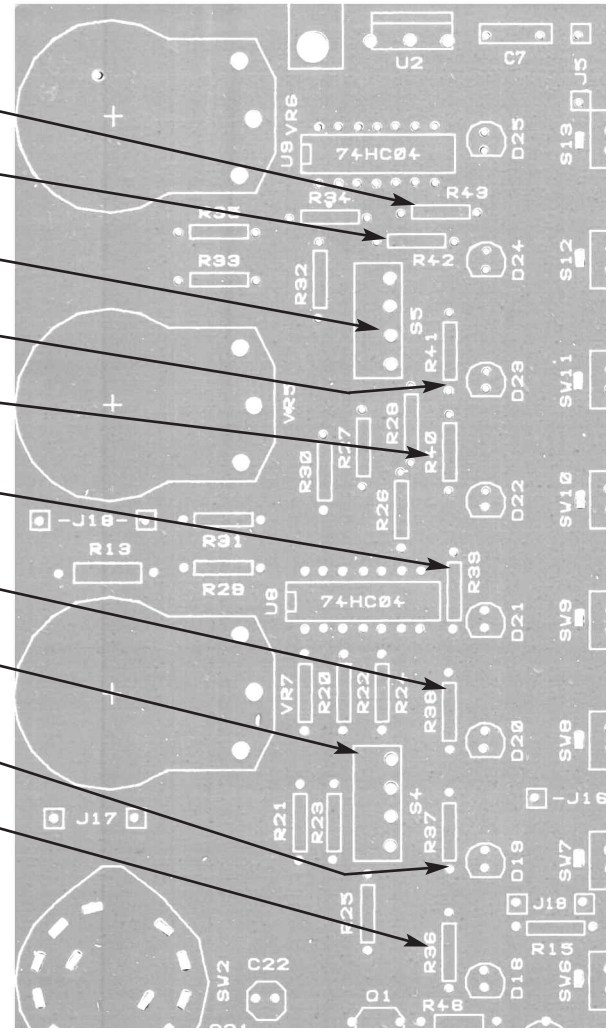

Figure A

Mount the connector as shown and solder the pins of the connector.

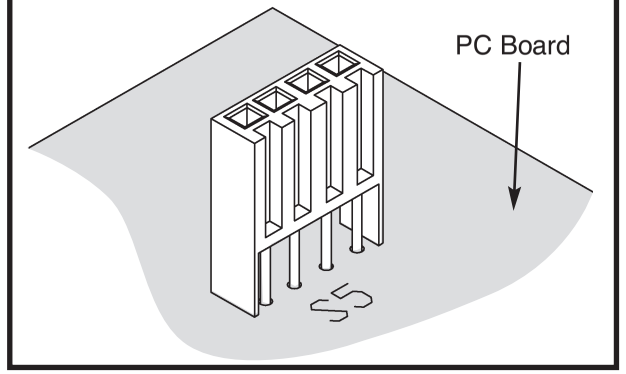

INSTALL COMPONENTS TO PC BOARD

Start Here

- ☐ R34 - 100kΩ 5% 1/4W Resistor (brown-black-yellow-gold)
- ☐ R35 - 100kΩ 5% 1/4W Resistor (brown-black-yellow-gold)
- ☐ R33 - 100kΩ 5% 1/4W Resistor (brown-black-yellow-gold)
- ☐ R32 - 100kΩ 5% 1/4W Resistor (brown-black-yellow-gold)
- ☐ R28 - 100kΩ 5% 1/4W Resistor (brown-black-yellow-gold)
- ☐ R27 - 100kΩ 5% 1/4W Resistor (brown-black-yellow-gold)
- ☐ R30 - 100kΩ 5% 1/4W Resistor (brown-black-yellow-gold)
- ☐ R31 - 100kΩ 5% 1/4W Resistor (brown-black-yellow-gold)
- ☐ R29 - 100kΩ 5% 1/4W Resistor (brown-black-yellow-gold)
- ☐ R26 - 100kΩ 5% 1/4W Resistor (brown-black-yellow-gold)
- ☐ R20 - 100kΩ 5% 1/4W Resistor (brown-black-yellow-gold)
- ☐ R22 - 100kΩ 5% 1/4W Resistor (brown-black-yellow-gold)
- ☐ R24 - 100kΩ 5% 1/4W Resistor (brown-black-yellow-gold)
- ☐ R21 - 100kΩ 5% 1/4W Resistor (brown-black-yellow-gold)
- ☐ R23 - 100kΩ 5% 1/4W Resistor (brown-black-yellow-gold)
- ☐ R25 - 100kΩ 5% 1/4W Resistor (brown-black-yellow-gold)

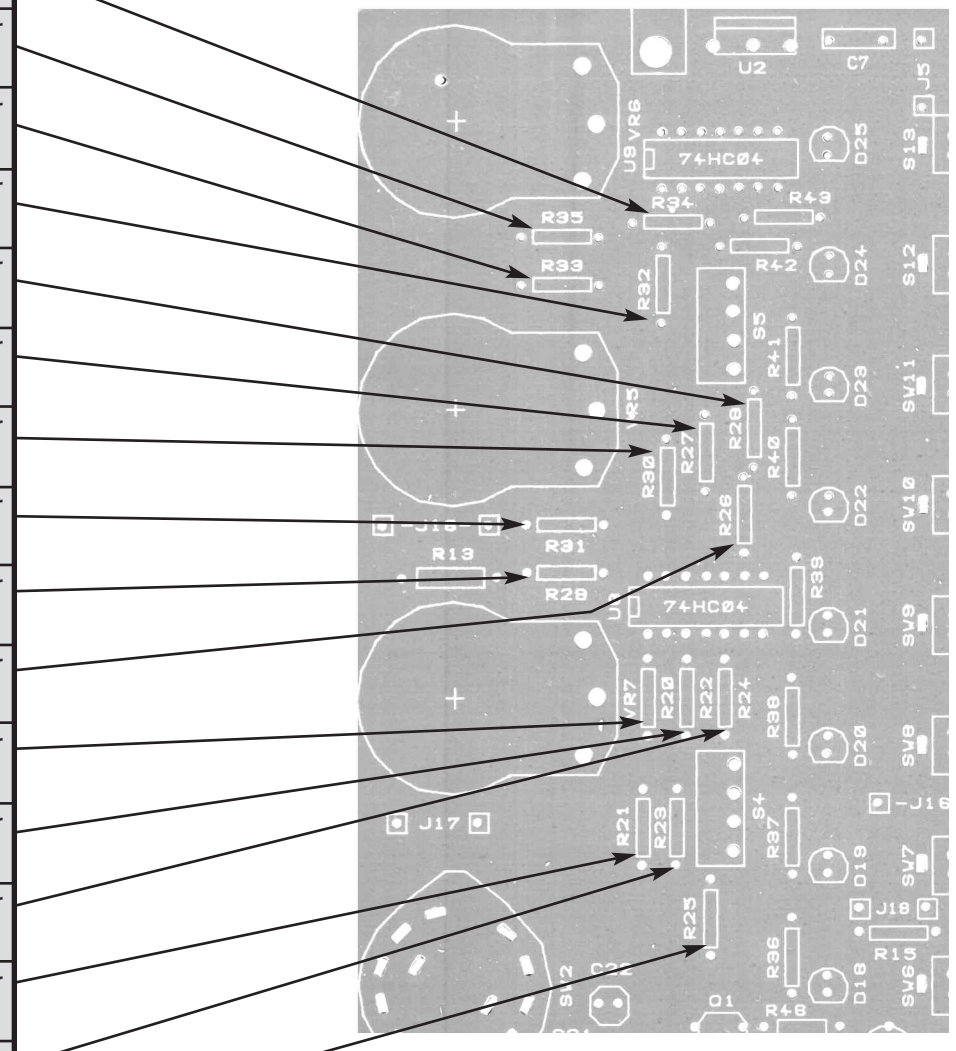

HOW TO INSTALL CONNECTORS ONTO TRANSFORMER WIRES

A connector will be placed onto the primary wires of the transformer. This will allow you to remove the top panel from the trainer. Follow the procedures below.

- ❒ Cut a six inch length off of each black primary wire.
- ❒ Strip the insulation off of each end of the six inch wires to expose 1/4" of bare wire.
- ❒ Place one wire onto the female pin and crimp the outer crimp tabs with pliers over the insulation as shown in Figure 1A.
- ❒ Crimp the inner tabs with pliers onto the bare wire as shown in Figure 1B.
- ❒ Solder the wire to the pin as shown in Figure 1C.
- ❒ Connect the other female pin to the other wire using the same procedures above.
- ❒ Insert the two pin/wire assemblies into the female housing as shown in Figure 2. Pull on the wire to check that the pin is inserted all the way in. It should not pull out of the housing. The locking tabs should be bent outward to hold the pin in the housing.

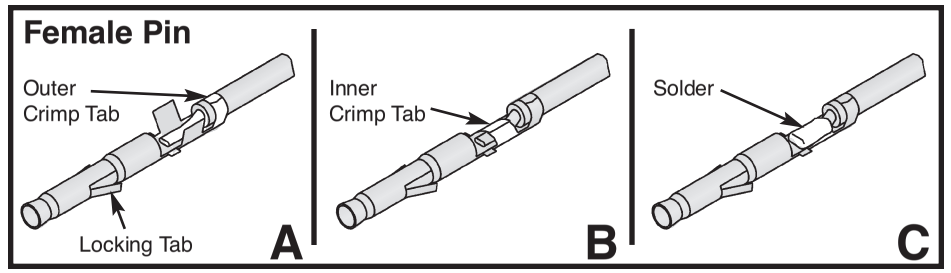

Figure 1

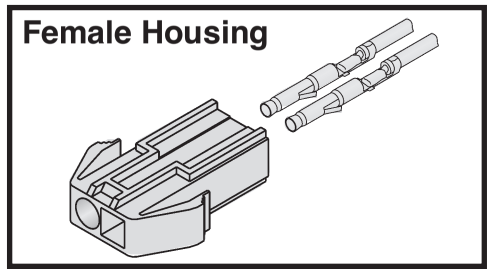

Figure 2

Transformer Wires

- ❒ Strip the insulation off of each of the black primary wires to expose 1/4" of bare wire.
- ❒ Place the wire onto the male pin and crimp the outer crimp tabs with pliers over the insulation as shown in Figure 3A.
- ❒ Crimp the inner tabs with pliers onto the bare wire as shown in Figure 3B.
- ❒ Solder the wire to the pin as shown in Figure 3C.
- ❒ Connect the other male pin to the other primary wire using the same procedures above.
- ❒ Insert the two pin/wire assemblies into the male housing as shown in Figure 4. Pull on the wire to check that the pin is inserted all the way in. It should not pull out of the housing.
- ❒ Connect the male and female housing as shown in Figure 5. Note that the connector only fits together one way.
- ❒ To detach the connector, push down on the end of the lock arm and pull the two apart.

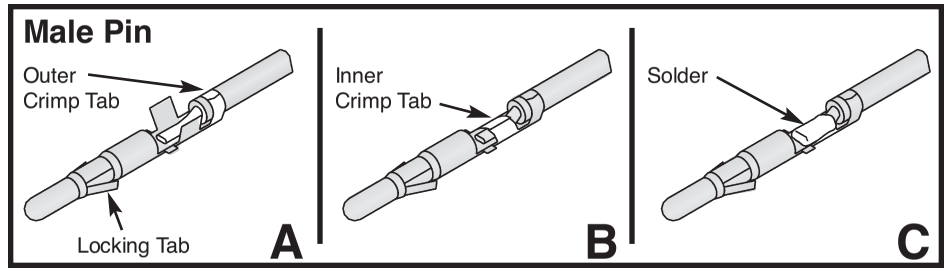

Figure 3

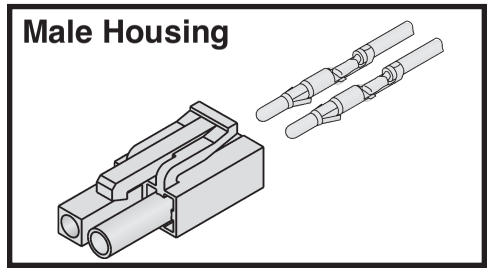

Figure 4

Figure 5

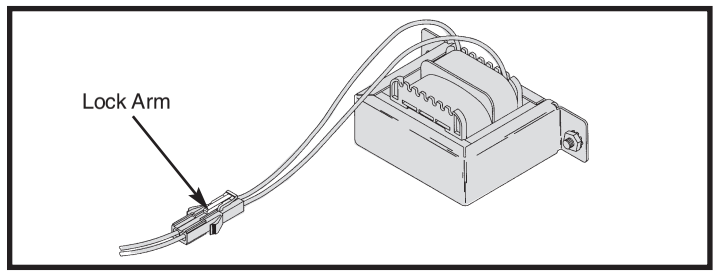

MOUNT COMPONENTS TO PANEL

- ❒ Push the illuminated switch into the hole in the top panel with the lugs as shown in Figure V.
- ❒ Install the fuse holder with the side lug in the position shown in Figure V. Fasten the fuse holder in place with the nut as shown in Figure V. Unscrew the cap and insert the fuse into the holder.
- ❒ There is a raised area on the back side of the top panel. Screw the spacer to the raised area by inserting a 4-40 x 1/4" flat head screw into the hole in the raised area from the top side of the panel (see Figure W).
- ❒ When mounting the breadboard, use the holes shown in Figure X. Mount the breadboard with two #4 x 1/4" AB black screws from the back side of the top panel as shown in Figure W. The negative (blue) stripe should be on top and the numbers reading from left to right should start with number 1 (see Figure Y). **CAUTION: Do not remove the paper backing from the back of the breadboards.** Do not over-tighten the black screws.

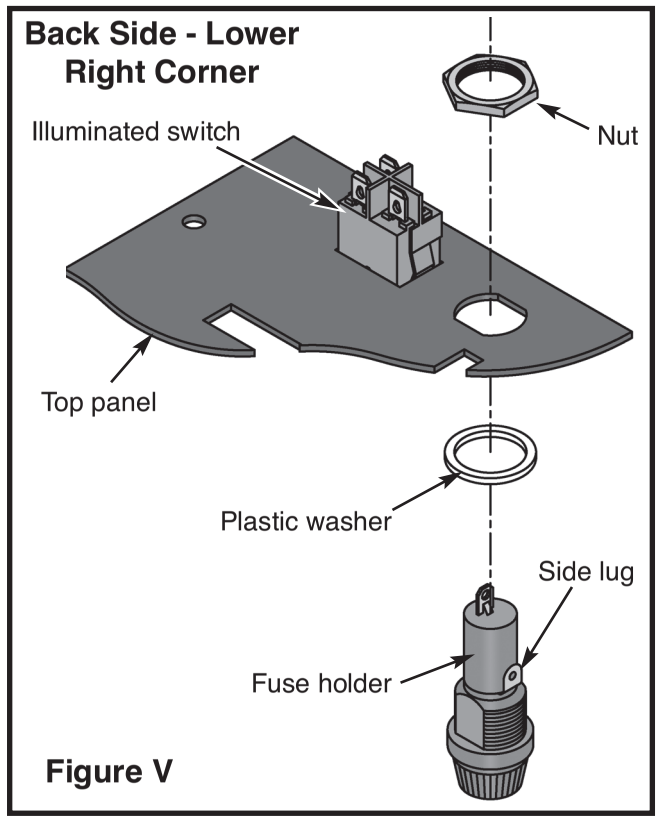

Figure V

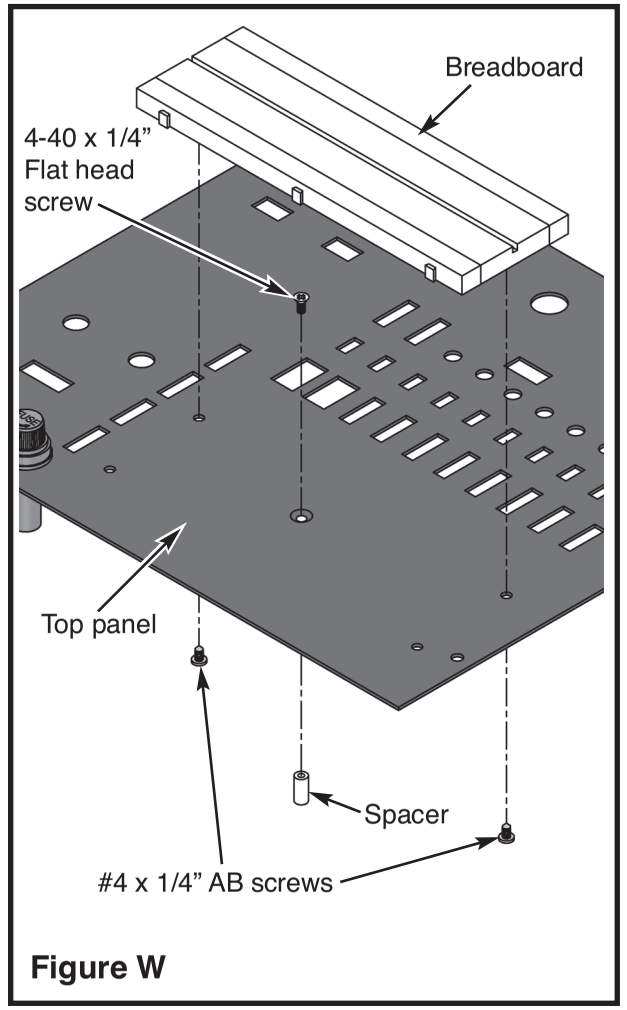

Figure W

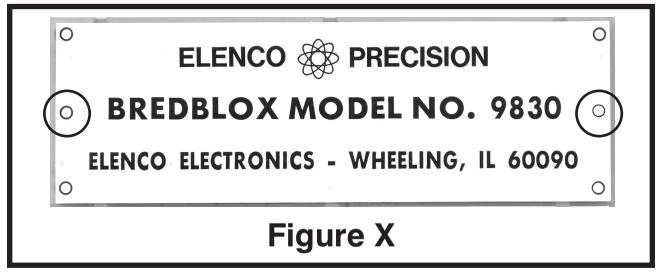

Figure X

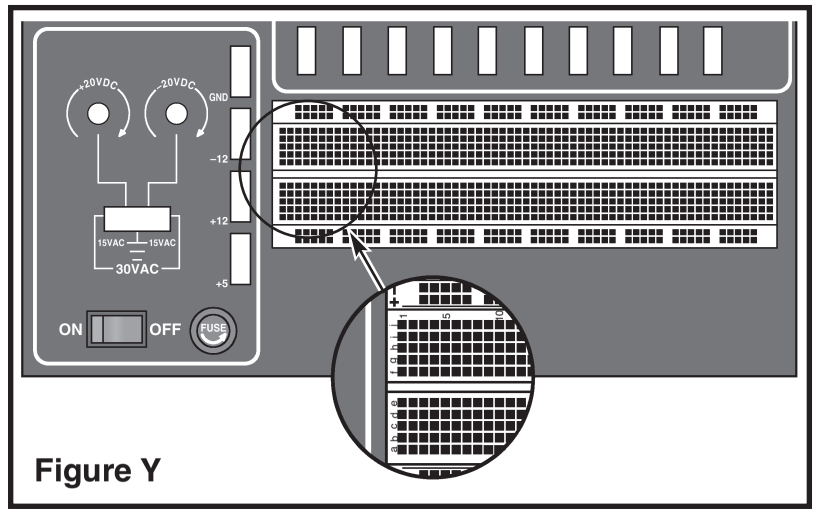

Figure Y

USERS DESCRIPTION OF FRONT PANEL

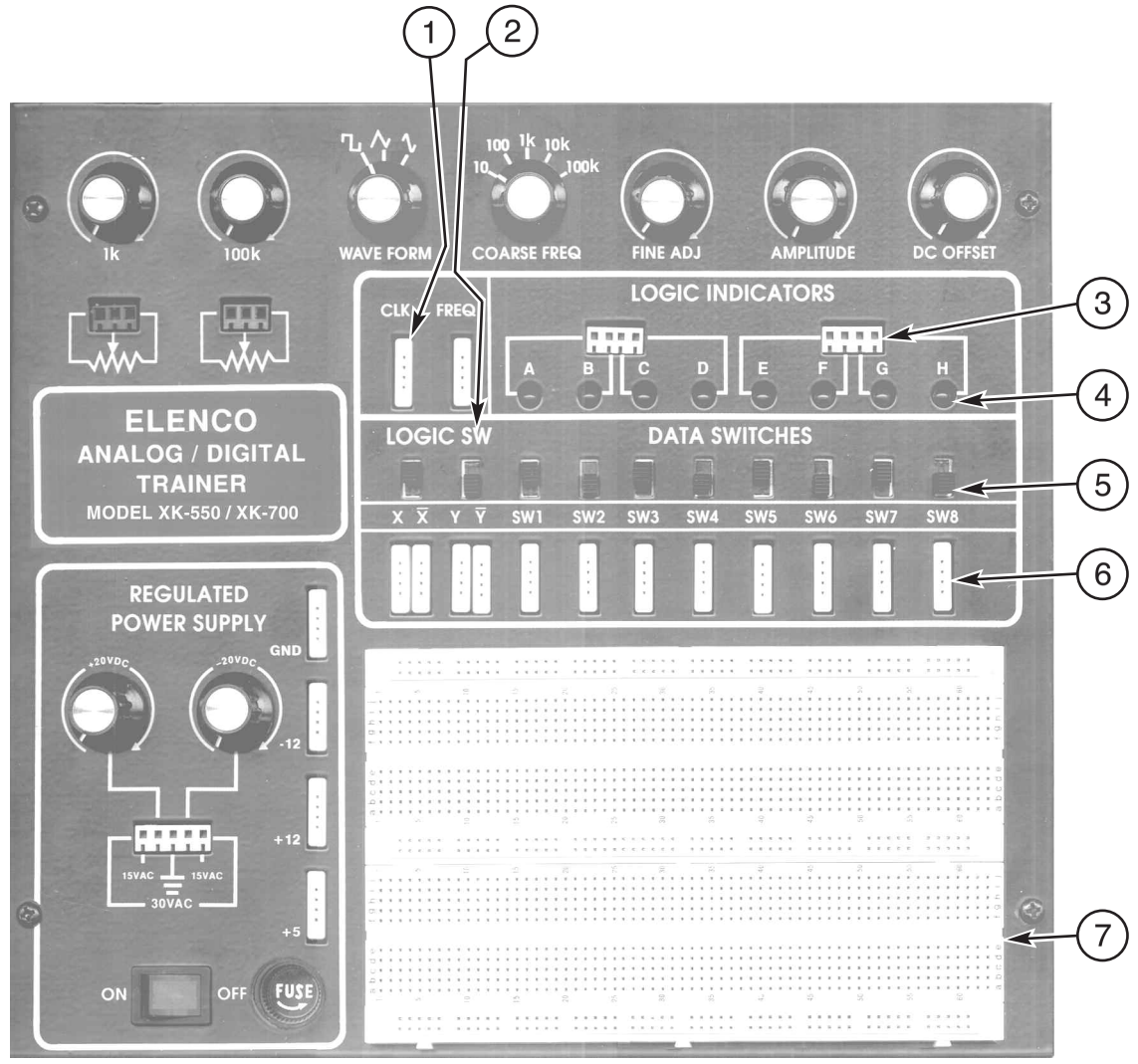

1. **Output Terminals** - For all functions as stated. 4 pins per block.
2. **Two Logic Switches** - These are no bounce logic switches. Give one signal state change per movement of switch.
3. **Input Terminals for Logic Indicator LEDs** - "A" input corresponds with "A" lamp, etc.
4. **Logic Indictators** - Eight LEDs.
5. **Eight Data Switches** - Lets output of 5V or 0V depending on position.
6. **Output Terminal** - For all functions as stated. 4 pins per block.
7. **Breadboard** - One breadboard containing 730 tie points.

DG-700-D

XK-700 DIGITAL KIT (DG-700-D) PARTS LIST

RESISTORS

Qty.	Symbol	Value	Color Code	Part #
❒ 8	R36 - R43	120Ω 5% 1/4W	brown-red-brown-gold	131200
❒ 1	R15	220Ω 5% 1/4W	red-red-brown-gold	132200
❒ 4	R16 - R19	1kΩ 5% 1/4W	brown-black-red-gold	141000
❒ 16	R20 - R35	100kΩ 5% 1/4W	brown-black-yellow-gold	161000

SEMICONDUCTORS

Qty.	Symbol	Value	Description	Part #
❒ 1	U7	SN7403	Integrated circuit (IC)	337403
❒ 8	D18 - D25		Light emitting diode (LED), red	350002
❒ 2	U8, U9	74HC04	Integrated circuit (IC)	39HC04

MISCELLANEOUS

Qty.	Symbol	Description	Part #
❒ 10	SW4 - SW13	Slide switch SPDT	541009
❒ 2	S4, S5	Connector 4-pin	591042
❒ 8		Spacer 1/4” #8	624124
❒ 2		Screw	642430
❒ 3	U7 - U9	Socket IC 14-Pin	664014
❒ 12	B7 - B18	Breadboard	665204
❒ 1		Bredblox	99426

INTRODUCTION

The Digital Section is the fourth package of the XK-700K kit that you are building. The Digital Section of your trainer contains all of the necessary functions to do your digital designs. They consist of a clock generator, two no bounce logic switches, 8 LED indicator lamps and 8 data switches. We have also added a 730 tie point Breadblox to your already existing 830 tie points, giving you a total of 1560 tie points to handle complex circuit designs.

SPECIFICATIONS

- Data switches, eight DPDT, Hi 5V, low 0V.
- Logic switches, two no bounce with complementary output.
  “On” voltage level 2.8V min., “Off” voltage level 1V max.
  Input impedance 100kΩ.
- Eight LED readouts, 100kΩ input impedance.
- Clock frequency, 1Hz to 100kHz in 5 steps continuously variable.
- Clock amplitude, 5Vpp squarewave.
- Clock rise time, better than 100 nsec.
- Breadboard 730 tie points.

WIRE SWITCH AND FUSE HOLDER (see Figure Z)

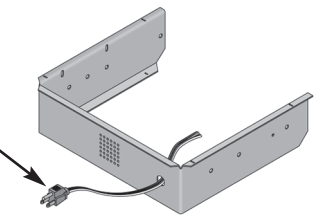

Line Cord

❒ Slide the line cord through the frame as shown.
❒ Spread the three line cord wires apart 6” from the end.
❒ Mount the solder lug to the side panel using a 6-32 x 5/16” screw and 6-32 nut.

Fuse

❒ Strip the insulation off of both ends of the 6” red wire to expose 1/4” of bare wire. Pass the wire through the 1/2” diameter shrink tubing. Attach one end to the side lug on the fuse holder and then solder into place.
❒ Pass the smooth edged line cord wire through the 1/2” diameter shrink tubing and attach to the end lug on the fuse holder, solder into place.
❒ Slide the shrink tubing over the fuse holder covering both lugs. Shrink the tubing for a snug fit. You may use a hair dryer, heat gun (at lowest setting or you will melt the tubing) or the heat emitting from your soldering iron (do not touch the tubing or the wires with the iron).

Switch

Disconnect the connector for the transformer.
❒ Pass the 6” strip of red wire (leading from the side lug of the fuse holder), the (A) and (B) black transformer wire, and the ribbed line cord wire through the 3/4” diameter piece of shrink tubing.
❒ Cut the 2” section of 3/16” diameter shrink tubing in half to create two 1” sections. Slide a 3/16” diameter piece of shrink tubing over the loose end of the red wire. Attach the red wire to lug 1 on the switch and then solder into place.
❒ Pass the black transformer wire labeled (B) through a 3/16” diameter piece of shrink tubing. Attach the wire to lug 2 on the switch and then solder into place.
❒ Slide the shrink tubing over lug 1 and lug 2 on the switch. Shrink the tubing into place.
❒ Strip the insulation off of the black transformer wire (A) and the ribbed edged line cord wire to expose 1/2” of bare wire. Twist the two bare wires together. Pass the wires through the 1/4” diameter piece of shrink tubing. Attach the wires to lug 3 on the switch and solder into place. Slide the tubing over the lug. Shrink the tubing into place.
❒ Slide the 3/4” diameter shrink tubing over the switch and shrink into place.
❒ Reconnect the connector for the transformer.

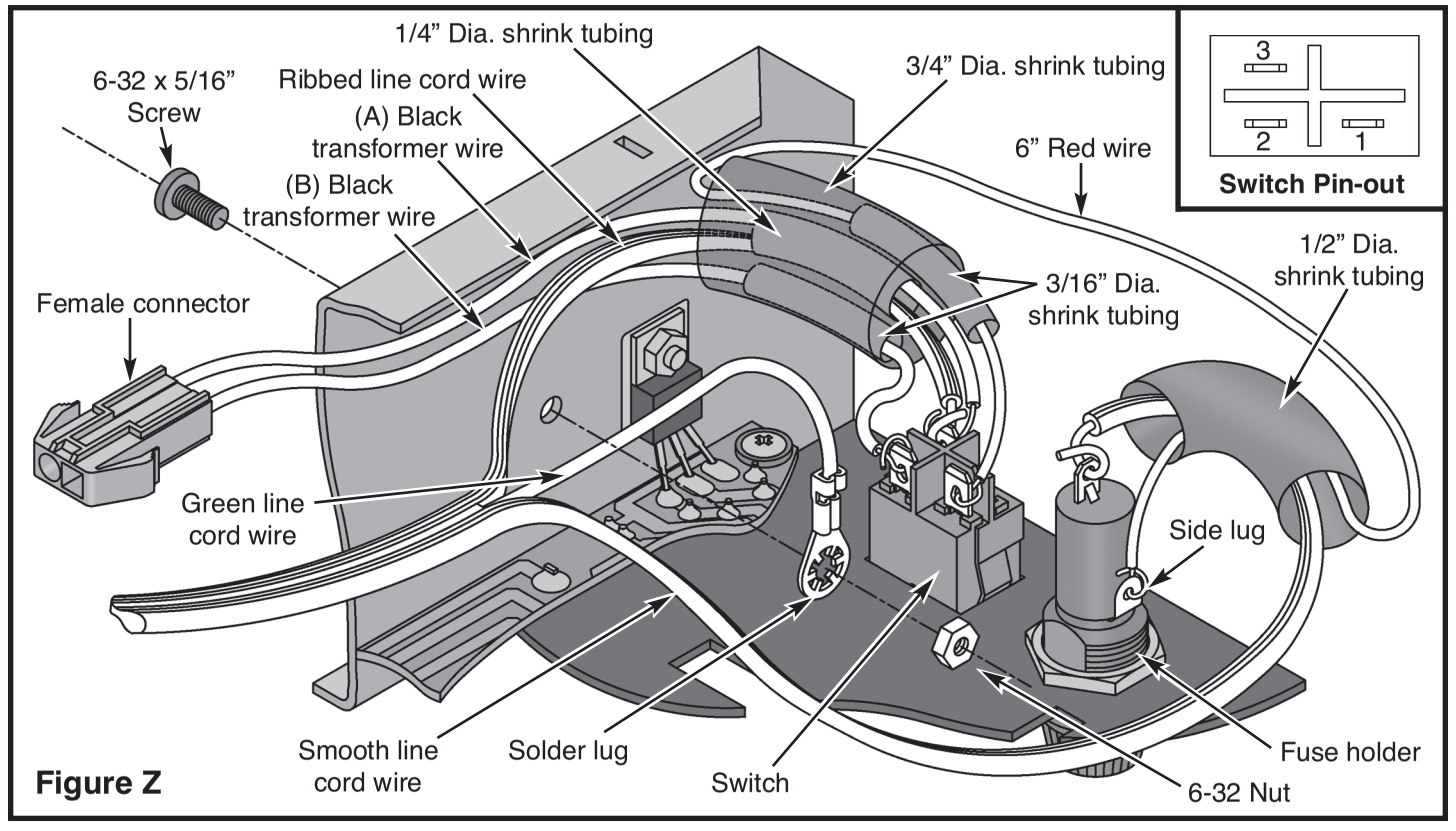

Figure Z

RESISTANCE ANALYSIS OF POWER SUPPLY

Static testing of the power supply circuits. **Do not plug the power supply into the 120VAC power supply source until all resistance readings check out. The values given below are approximate.**

See Figure AA for locations of testing points.

From	To	Circuit	Ohms	Resistance Measured
1	Right Side Panel	Earth Ground	less than 1Ω	
2	3	On/Off Switch, Fuse	Infinite (SW1 Off)	
2	3	On/Off, Fuse	7Ω (SW1 On)	
4	5	12V Secondary	1.5Ω	
6	7	5V Secondary	1.2Ω	
8	9	Variable Voltage	1.6Ω	
10	GND 5-pin connector	+12V Regulator Input	greater than 20kΩ	
✧ 11 (com)	GND (VΩ) (5-pin connector)	–12V Regulator Input	greater than 20kΩ	
12	GND (B1)	+5V Regulator Input	greater than 20kΩ	
13	GND (B1)	+Variable Regulator Input	greater than 20kΩ	
✧ 14 (com)	GND (VΩ) (5-pin connector)	–Variable Regulator Input	greater than 20kΩ	
✪★ 25 (com)	GND (VΩ) (5-pin connector)	Voltage ADJ +20V Regulator	CCW <1Ω CW >1.4kΩ	
✪★ 26	GND (VΩ) (5-pin connector)	Voltage ADJ -20V Regulator	greater than 1.4kΩ	
27	GND (5-pin connector)	+5V Regulator GND	less than 1Ω	
28	GND (5-pin connector)	+12V Regulator GND	less than 1Ω	
29	GND (5-pin connector)	–12V Regulator GND	less than 1Ω	
10	15	+12V Regulator Input	less than 1Ω	
11	16	–12V Regulator Input	less than 1Ω	
12	17	+5V Regulator Input	less than 1Ω	
13	18	+Variable Regulator Input	less than 1Ω	
14	19	–Variable Regulator Input	less than 1Ω	
20	14	Voltage ADJ +20V Regulator	CCW 1.2kΩ CW 3.3kΩ	
20	+20 (5-pin connector)	+Variable Regulator Output	less than 1Ω	
20	13	Voltage ADJ –20V Regulator	CCW 1.2kΩ CW 3.3kΩ	
21	–20 (5-pin connector)	–Variable Regulator Output	less than 1Ω	
22	GND (5-pin connector)	+5V Regulator Output	greater than 5kΩ	
22	B4	+5V Regulator Output	less than 1Ω	
23	GND (5-pin connector)	+12V Regulator Output	greater than 5kΩ	
23	B3	+12V Regulator Output	less than 1Ω	
24	GND (5-pin connector)	–12V Regulator Output	greater than 5kΩ	
24	B2	–12V Regulator Output	less than 1Ω	
5	15VAC (5-pin connector right)	15VAC	less than 1Ω	
4	15VAC (5-pin connector left)	15VAC	less than 1Ω	

★ ±30% ✧Note: meter lead polarity CCW - Counter Clockwise CW - Clockwise ✪R1 & VR2 Adjustment

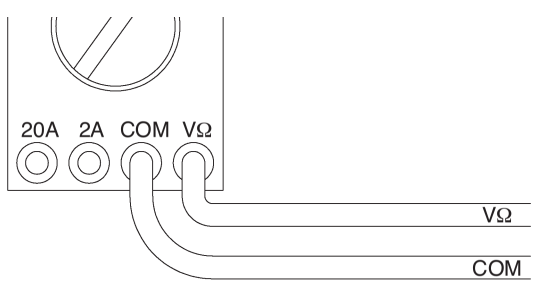

SCHEMATIC DIAGRAM - ANALOG SECTION

REV-B

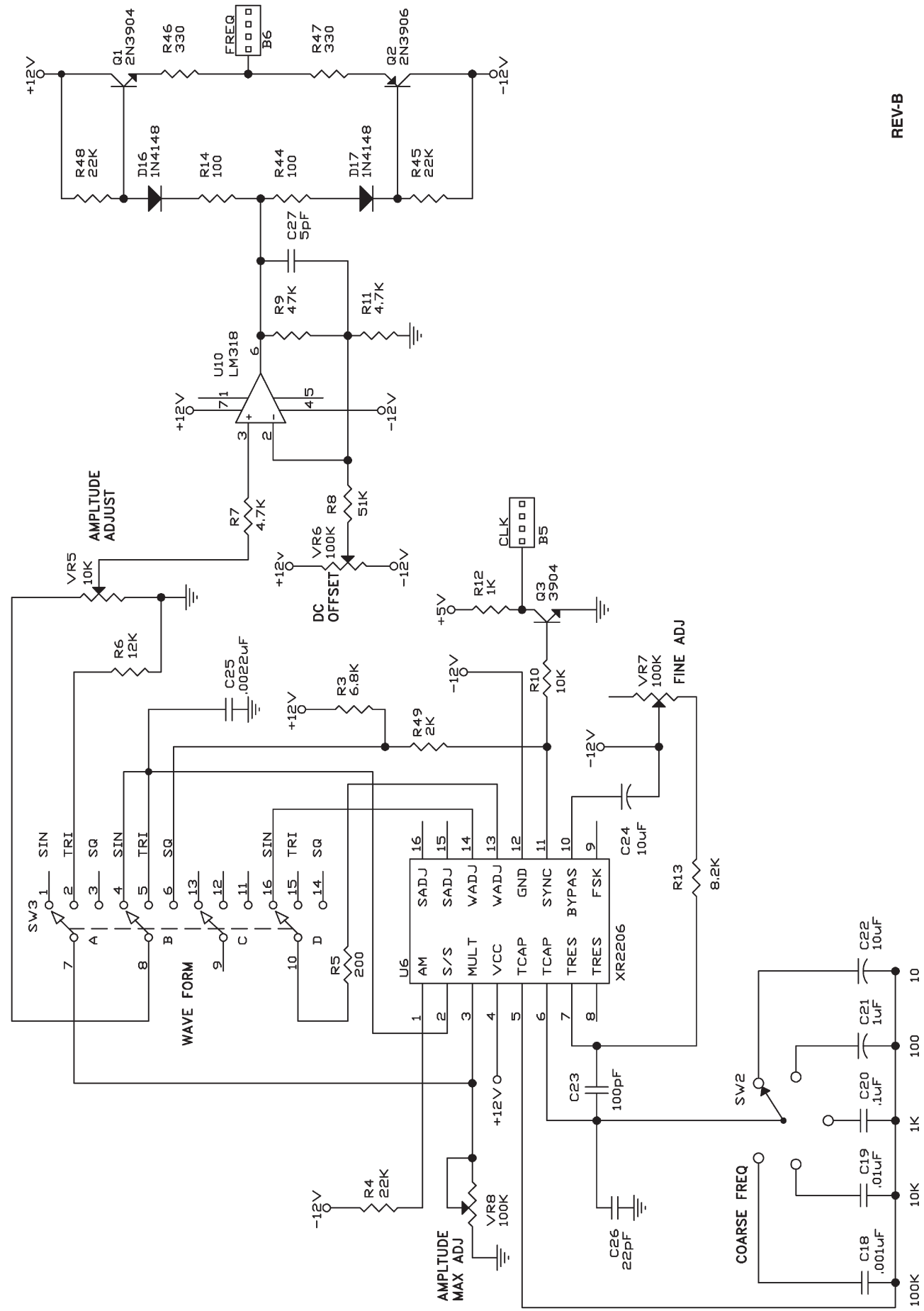

CIRCUIT DESCRIPTION

The function generator frequencies are produced by an XR2206 integrated circuit. This IC is capable of producing high quality sine, square and triangle waveforms of high stability and accuracy. The output waveform can be both amplitude and frequency modulated by an external voltage. Figure P shows the block diagram of the XR2206 IC.

Functional Block Diagram

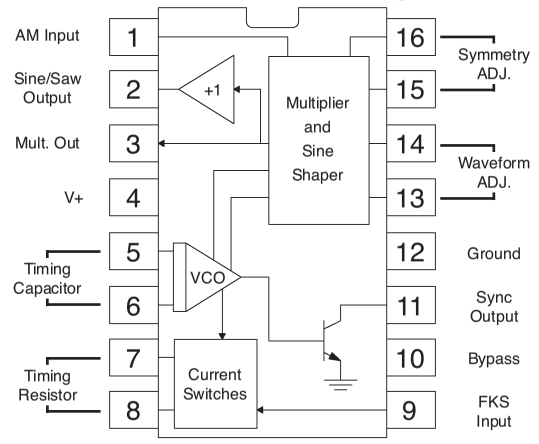

Figure P

The XR2206 is comprised of four functions blocks, a voltage controlled oscillator (VCO), an analog multiplier and sine shaper, a unity gain buffer amplifier, and a set of current switches.

The VCO actually produces an output frequency proportional to an input current. Across pins 5 and 6, a timing capacitor is switched in to give 5 different ranges of frequencies via COARSE FREQ switch. On pin 7, the FINE FREQ ADJ variable resistor controls the actual frequency output. These two components form the RC time constants for the oscillator frequency.

The VCO produces a square wave signal. This square wave is sent to a shaper and converted into a sine wave.

QUIZ - ANALOG SECTION

INSTRUCTIONS: Complete the following examination and check your answers carefully.

1. The analog multiplier is part of . . .
   - ❒ A. the voltage controlled oscillator.
   - ❒ B. unity gain buffer amplifier.
   - ❒ C. four function blocks.
   - ❒ D. timing capacitor circuit.

2. Increasing the current of the VCO will effect the . . .
   - ❒ A. amplitude.
   - ❒ B. DC offset.
   - ❒ C. AM modulation.
   - ❒ D. frequency.

3. The RC time constant is determined by . . .
   - ❒ A. pins 5 and 6.
   - ❒ B. voltage controlled oscillator.
   - ❒ C. pin 7 and a variable resistor.
   - ❒ D. components on pins 5, 6, and 7.

4. What pins on the 2206 IC are used to change the sine wave to a saw wave?
   - ❒ A. 5, 6
   - ❒ B. 15, 16
   - ❒ C. 13, 14
   - ❒ D. 4, 12

5. Adjusting P4 from +12V to –12V effects . . .
   - ❒ A. sine wave amplitude.
   - ❒ B. modulation.
   - ❒ C. frequency stability.
   - ❒ D. DC offset.

6. Coarse frequency is set by . . .
   - ❒ A. P6.
   - ❒ B. capacitor C11 through C15.
   - ❒ C. C21.
   - ❒ D. P1 and SW9.

7. A 1 volt DC level on the FM input will . . .
   - ❒ A. shift the frequency 1kHz.
   - ❒ B. shift the frequency to DC.
   - ❒ C. have no effect.
   - ❒ D. shift the frequency 1MHz.

8. The square wave and CLK output are 180° out of phase because . . .
   - ❒ A. Q2 inverts the CLK output.
   - ❒ B. Q1 inverts the square wave output.
   - ❒ C. a negative voltage is applied to P5.
   - ❒ D. pin 12 is tied to –12V.

9. Clipping of the sine wave outputs can be corrected by . . .
   - ❒ A. P5.
   - ❒ B. the DC offset pot.
   - ❒ C. lowering the +5V power supply.
   - ❒ D. none of the above.

10. The sync output produces . . .
    - ❒ A. a sine wave.
    - ❒ B. a saw wave.
    - ❒ C. voltage spikes.
    - ❒ D. a square wave.

Answers: 1. C; 2. D; 3. D; 4. C; 5. D; 6. B; 7. C; 8. A; 9. D; 10. D

Locations for Testing Points

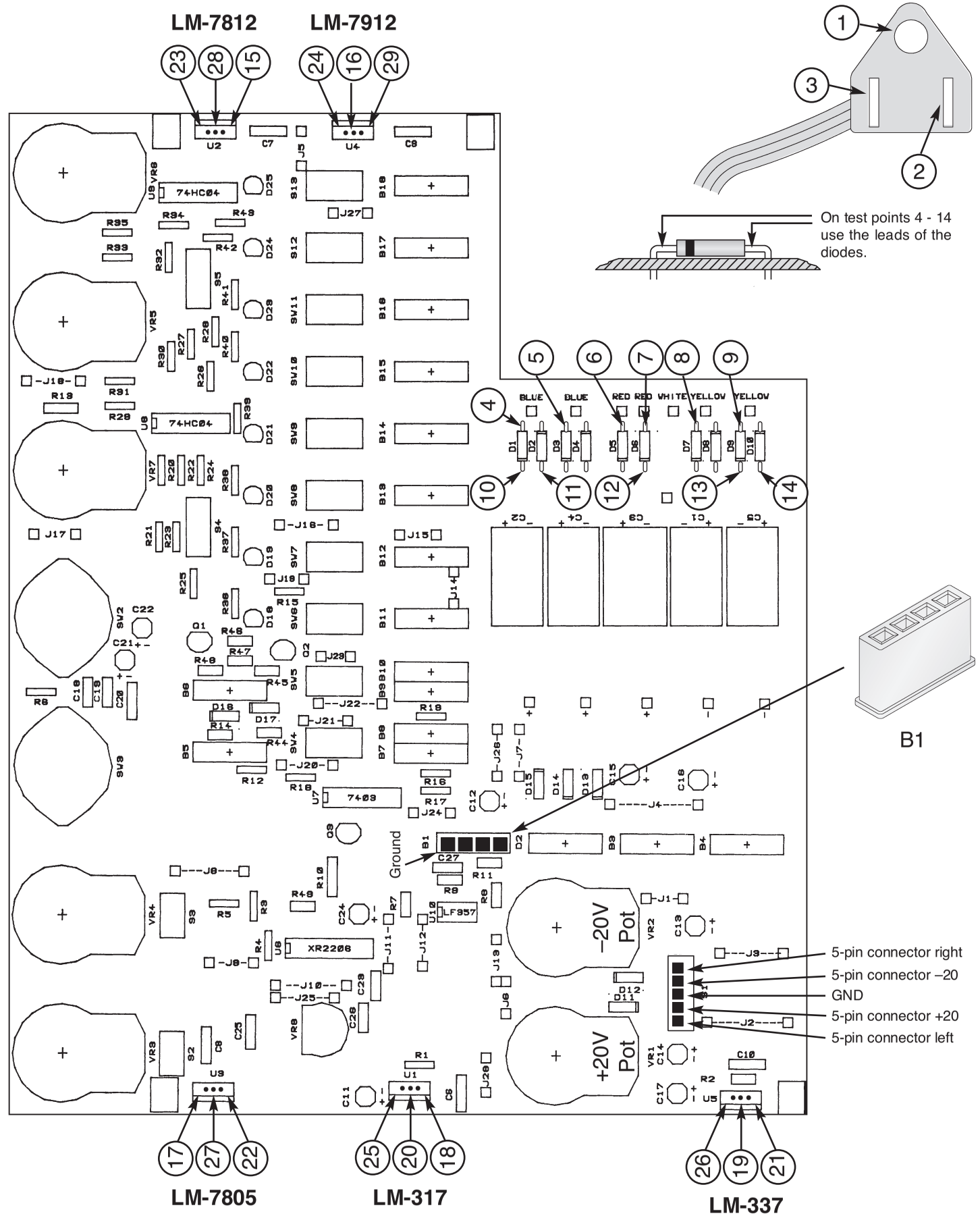

Plug of line cord

Figure AA

VOLTAGE ANALYSIS OF POWER SUPPLY

Proceed with the voltage analysis only if the resistance readings were satisfactory.

Place the top panel on the unit. If any capacitors are inserted backwards, the panel will shield you if they explode. Make sure that the ON/OFF switch is in the **OFF** position. Plug the line cord into the 120VAC power source. Turn the unit on and let it sit for a few minutes. Turn OFF the ON/OFF switch and remove the top panel, placing it along the left side of the trainer. Turn ON the ON/OFF switch and measure the voltage point as listed in the chart below. **The values given are approximate.**

See Figure AA for locations of the testing points.

	From	To	Circuit	Volts	Volts Measured
	15	GND	+12V Regulator Input	+21V	
	B3	GND	+12V Regulator Output	+12V	
	16	GND	–12V Regulator Input	–21V	
	B2	GND	–12V Regulator Output	–12V	
	17	GND	+5V Regulator Input	+12.5V	
	B4	GND	+5V Regulator Output	+5V	
	18	GND	+20V Regulator Input	+28V	
★	+20 5-pin connector	GND	Voltage ADJ +20V Regulator	CCW 0V CW +20V	
★	+20 5-pin connector	GND	+20V Output	CCW +1.25V CW +20V	
	19	GND	–20 Regulator Input	–28V	
★	–20 5-pin connector	GND	Voltage ADJ -20V Regulator	CCW 0V CW –20V	
★	–20 5-pin connector	GND	–20V Output	CCW –1.25V CW –20V	
	15VAC 5-pin connector left	15VAC 5-pin connector right	30VAC	30VAC	

★ ±30% CCW - Counter-Clockwise CW - Clockwise

❒ **Turn unit off.**

Place the top panel on top of the unit.

FUSE REPLACEMENT

1. Turn the trainer off and unplug it from 120VAC power source.
2. Unscrew fuse holder cap and remove fuse.
3. **Use only a 1.25A fuse. Larger fuses or other fuse bypass will void the warranty of the trainer.**
4. Place the new fuse into the fuse holder cap and screw it back into the holder.
5. Plug trainer into 120VAC power source and turn the unit on.

FINAL ASSEMBLY

If you are immediately going to build the remaining section, do not continue with the instructions on this page, proceed to page 35.

❒ Fasten the front panel in place with four #6 x 3/8" thread cutting screws, as shown in Figure K.

❒ Fasten the PC board to the spacer on the front panel with a fiber washer and a 4-40 x 1/4" screw from the foil side of the PC board, in the location shown in Figure L.

❒ Fasten the pots to the front panel with an 8mm washer and a 7mm nut, as shown in Figure K.

❒ Turn the shafts on the two switches fully counter-clockwise. Push the knobs onto the shafts so that the line on the knob is in line with the "Squarewave" on the waveform control and "10" on the Coarse Frequency control (see Figure M).
If the knobs are loose on the shafts, insert a screwdriver into the slot and expand the slot slightly (see Figure O).

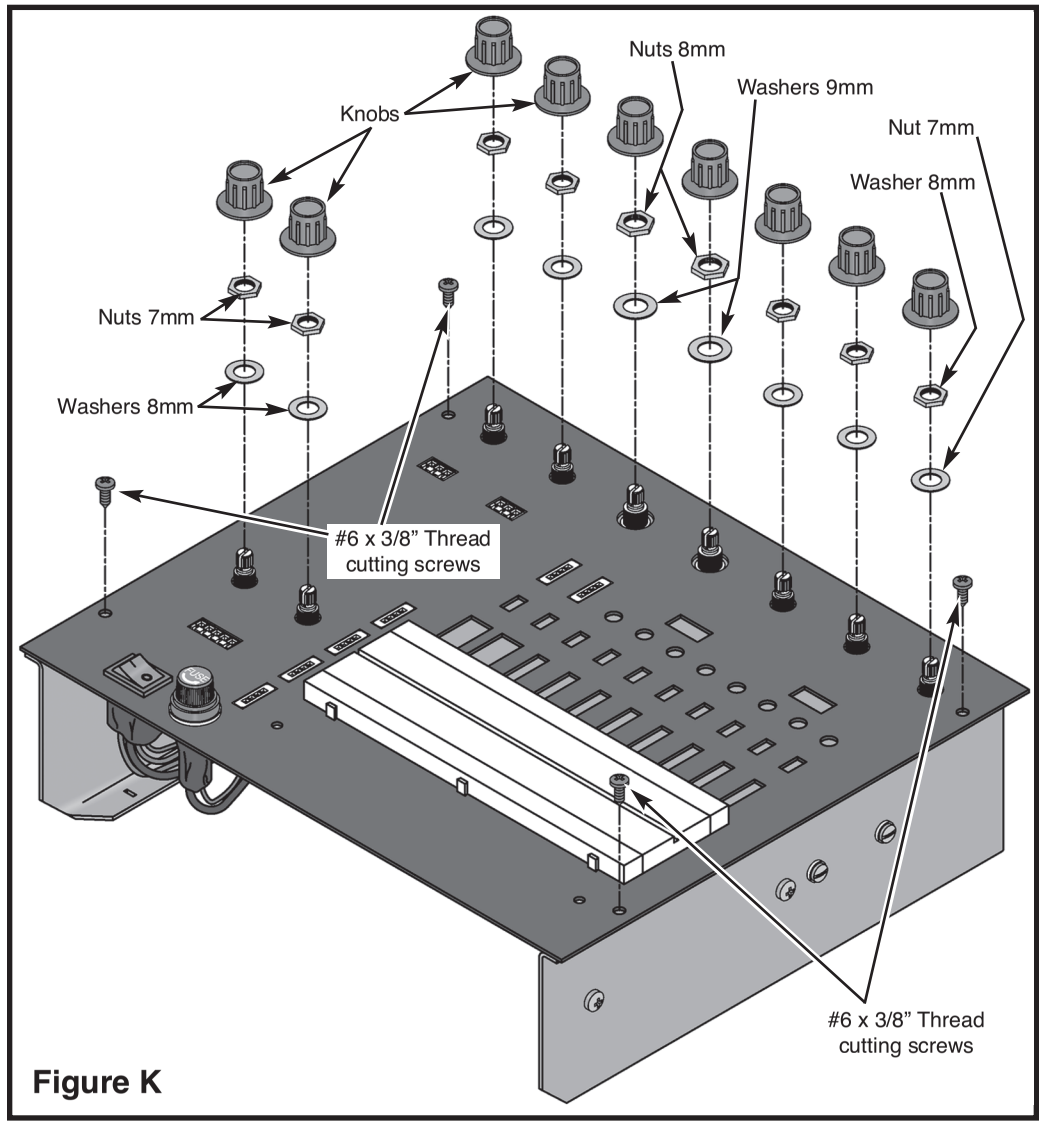

Figure K

❒ Turn the shafts on the pots fully counter-clockwise. Push the knobs onto the shafts so that the line on the knob is in line with the end of the circle on the front panel, as shown in Figure N.
If the knobs are loose on the shafts, insert a screwdriver into the slot and expand the slot slightly (see Figure O).

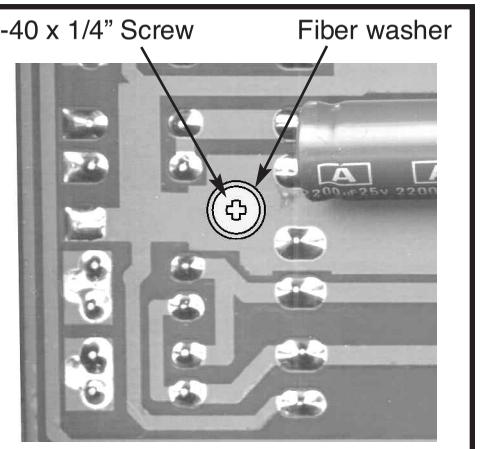

Figure L

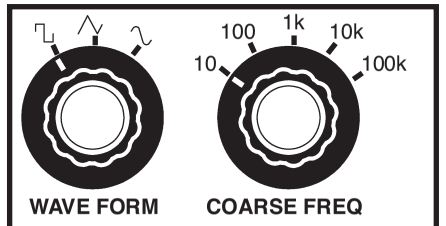

Figure M



Figure N

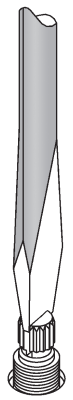

Figure O

5. Set VR8 fully counter-clockwise.

6. Adjust the DC OFFSET knob until the meter reads 0 volts DC.

7. Set the meter to the 20 volts AC range and slowly turn VR8 clockwise until the meter reads 5.8 volts AC.

Note: Adjusting the DC offset will affect the VAC readings.

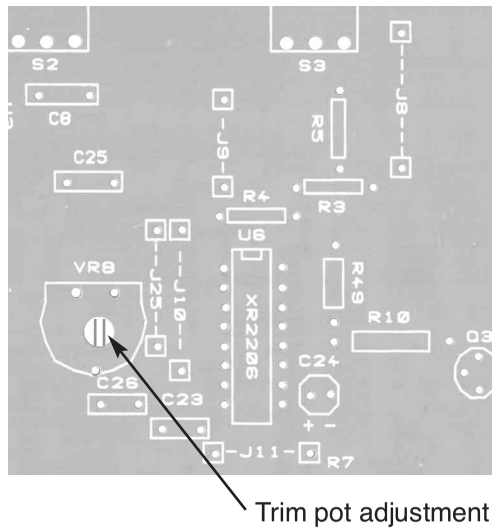

TESTING THE TRIANGLE WAVEFORM
1. Switch the WAVEFORM knob to its triangle wave setting.
2. With the meter set to the 20 volts AC range, you should read about 6.3 volts AC.

TESTING THE SQUARE WAVEFORM
1. Switch the WAVEFORM knob to its square wave setting.
2. Set your meter to the 20 volts AC range, you should now read about 12.5 volts AC.

Turn the unit off and unplug it from the AC outlet.

TROUBLESHOOTING CHART

This chart lists the condition and possible causes of several malfunctions. If a particular part is mentioned as a possible cause, check that part to see if it was installed correctly. Also, check it and the parts connected to it for good solder connections.

PROBLEM	POSSIBLE CAUSE
No wave form at FREQ	1. Check voltage at pins 4 (+12V) and 12 (–12V) of U6. 2. Check for wave forms at pin 2 of U6 and pin 3 of U10. A. Check R3-4, R7, R13, C18-22, C24, SW2-3, VR5 & VR7. 3. Measure voltage at pins 7 (+12V) and 4 (–12V) of U10. 4. Check R8, R9, R11, R14, R44-48, D16, D17, Q1 and Q2.
No sine, triangle or low amplitude	1. Check U6 pin 2 for wave form. A. Check VR8, voltage to IC.
Saw wave in sine position	1. R5 wrong value.
Wave forms clip top or bottom	1. Measure voltage at pins 7 (+12V) and 4 (–12V). 2. Adjust VR8. 3. Check R7, R9, R11, R14, R44-49, D16-17 and Q2-3.
No CLK wave output or low amplitude	1. Check pin 11 of U6 for square wave. A. Check Q2 shorted to ground. B. Check R10, R12 and Q3. C. Defective IC.
No square wave or low amplitude (FREQ output)	1. Check pin 11 of U6 for square wave. A. Check Q2 shorted to ground. B. Check R3, R49, SW3. C. Defective IC.
Outputs wrong frequency	1. Check C18-22, C24, R13, SW2 and VR7.
DC offset not working	1. Check voltage on VR6 for +12V and –12V; check R8.

POWER SUPPLY TESTING

Plug the trainer into a 120VAC outlet and switch to the "**ON**" position (the power switch should light). With a digital voltmeter, measure the voltage outputs at the power blocks. The +12V should measure between 11.4 and 12.6 volts. The 5V supply should read between 4.75 and 5.25 volts. The –12V supply should read between –11.4 and 12.6 volts.

Do not short the 15VAC output to ground.
Short the +12V, –12V and +5V supply to ground. They should turn off and recover when the short is removed. If you have a 25Ω 10 watt resistor, place it across the output terminal (2 watt resistor will work, but use it only for a few seconds). The output of the 12V supply should not change more than 0.20 volts. Do the same on the 5V supply using a 10Ω 5 watt resistor. Again, the output should not change more than 0.20 volts. In making this test, the voltmeter leads should be clipped to the terminal directly and no to the load leads. This is to prevent errors due to voltage drop from contact resistance of the load.

Check the variable voltage supplies in the same manner. Set the output voltage between 10-15 volts. Place the 25Ω 10 watt resistor across the output terminal. The voltage should stay within 0.20 volts of the no load voltage.

TROUBLESHOOTING CHART

This chart lists the condition and possible causes of several malfunctions. If a particular part is mentioned as a possible cause, check that part to see if it was installed correctly. Also, check it and the parts connected to it for good solder connections. **Note:** The values given in this troubleshooting chart are an approximation.

PROBLEM	POSSIBLE CAUSE
Switch doesn't light.	1. Check fuse and line cord.
Fuse blows when the unit is turned on.	1. Voltage supply shorted to GND. Use resistance analysis chart to find short.
No or low voltage at positive variable output.	1. Measure for an AC voltage of 18VAC at anode of D7 & D9. A. Transformer and/or secondary connection to PC board defective 2. Measure for a DC voltage of 28VDC at pin 3 of U1 LM317. A. Diodes D7, D9 in backwards or defective, check capacitor C1. 3. Set the voltage for minimum and measure pin 2 of U1. A. Voltage adjusts only from 7.8 - 9.8V R1 open or defective. B. Voltage 27V, check VR1 connections.
No or low voltage at positive variable output with load.	1. Check that capacitor C1 1000μF is inserted in the correct polarity. 2. Check ripple on pin 3 of U1. 8VP-P Max. A. Capacitor C1, and/or diodes D7, D9 defective.

PROBLEM	POSSIBLE CAUSE
No voltage at negative variable output.	1. Measure for an AC voltage of 18VAC at cathode of D8, D10. A. Transformer and/or secondary connection to PC board defective. 2. Measure DC voltage of –28VDC at pin 2 of U5 LM337. 3. Set voltage for minimum and measure pin 3 of U5. A. Voltage adjusts only from –7.8 to –9.8V R2 open or defective. B. Voltage –27V, check VR2 connections.
No or low voltage at negative variable output with load.	1. Check to see if capacitor C5 1000μF is inserted in the correct polarity. 2. Check ripple on pin 2 of U5. 6VP-P max. A. Capacitor C5 and/or diodes D8, D10 defective.
No +12V at output.	1. Measure an AC voltage of 15VAC at anode of D1, D3. A. Transformer and/or secondary connection to PC board defective. 2. Measure for a DC voltage of 21VDC at pin 1 of U2 LM7812. A. Diodes D1, D3 in backwards or defective, check capacitor C1. 3. Measure for a DC voltage of 12VDC on pin 3 of U2. A. U2 LM7812 defective or open ground.
No +12V at output with load.	1. Check capacitor C2 1000μF is inserted in the correct polarity. 2. Check ripple on pin 1 of U2. 7VP-P Max. A. Capacitor C2 or diodes D1, D3 defective.
No –12V at output.	1. Measure an AC voltage of 15VAC at anode of D2, D4. A. Transformer and/or secondary connection to PC board defective. 2. Measure for a DC voltage of -21VDC at pin 2 of U4 LM7912. A. Diodes D2, D4 in backwards or defective, check capacitor C4. 3. Measure for a –12VDC voltage on pin 3 of U4. A. U4 LM7912 defective or open ground.
No –12V at output with load.	1. Check capacitor C4 is inserted in the correct polarity. 2. Check ripple on pin 2 of U3. 7VP-P Max. A. Capacitor C4 and/or diodes D1, D3 defective.
No +5VDC at output	1. Measure an AC voltage of 9VAC at anode of D5, D6. A. Transformer and/or secondary connection to PC board defective. 2. Measure for a DC voltage of 12VDC at pin 1 of U3 LM7805. A. Diodes D5, D6 in backwards or defective, check capacitor C3. 3. Measure for a 5VDC voltage on pin 3 of U3 LM7805. A. U3 LM7805 defective or open ground.
No +5VDC at output with load.	1. Check that capacitor C3 is inserted in the correct polarity. 2. Check ripple on pin 1 of U3. 4VP-P Max. A. Capacitor C3 and/or diodes D5, D6 defective.

VOLTAGE ANALYSIS OF ANALOG SECTION

Proceed with the voltage analysis only if the resistance readings were satisfactory. **The values given below are approximate.**

The following measurements will be taken from the copper side of the PC board. Turn the unit on and place it upside down.

See Figure J for locations of the testing points.

From	To	Circuit	Volts	Volts Measured
Pin 4 (U6)	GND (B1)	U6 Vcc	+12V	
Pin 12 (U6)	GND (B1)	U6 GND	–12V	
Pin 7 (U10)	GND (B1)	U10 Vcc	+12V	
Pin 4 (U10)	GND (B1)	U10 Vcc–	–12V	

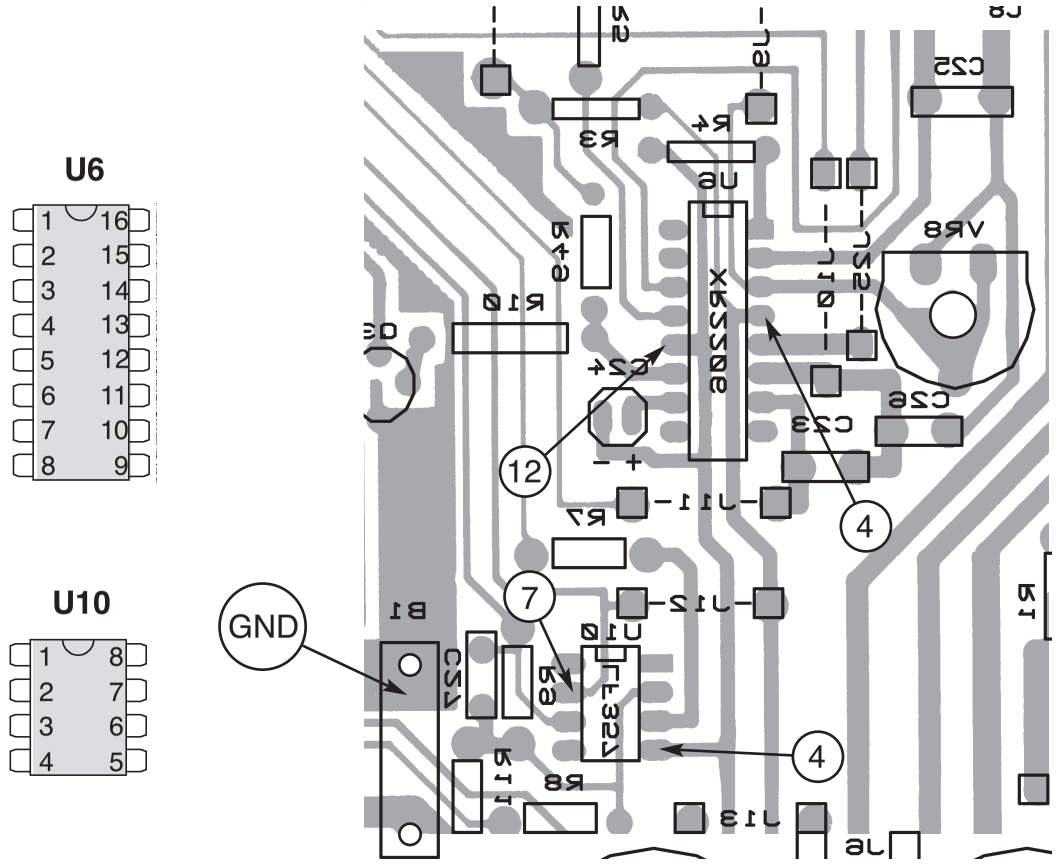

Turn unit right side up. **Figure J**

TESTING THE FUNCTION GENERATOR

Note: Use the knobs when turning the switches.

TESTING THE SINE WAVE

1. Set your meter to the 200mV DC range.
2. Connect the red meter lead to the 4-pin breadblock marked FREQ and the black lead wire to the 4-pin breadblock marked GND.
3. Set the WAVEFORM knob to SINE, COARSE FREQUENCY knob to 1k and the FINE ADJ and AMPLITUDE knobs fully clockwise.
4. Set the DC offset to the middle position. Then, turn on the trainer.

RESISTANCE ANALYSIS OF ANALOG SECTION

Static testing of the analog circuits. **Do not plug in the power supply into 120VAC power source until all resistance readings check out. The values given below are approximated.**

SET SW3 TO SQUARE WAVE (refer to top panel)

	From	To	Circuit	Ohms	Resistance Measured
✦	Pin 11 (U6)	Pin 3 (U10)	Square Wave	VR5 CCW 12.3kΩ	
	Pin 11 (U6)	Pin 3 (U10)	Square Wave	VR5 CW 6.7kΩ	

SET SW3 TO TRIANGLE WAVE

	From	To	Circuit	Ohms	Resistance Measured
✦	Pin 2 (U6)	Pin 3 (U10)	Triangle Wave	VR5 CCW 14.7kΩ	
	Pin 2 (U6)	Pin 3 (U10)	Triangle Wave	VR5 CW 4.7kΩ	
	Pin 13 (U6)	Pin 14 (U6)	Triangle Wave	Greater than 1kΩ	

SET SW3 TO SINE WAVE

	From	To	Circuit	Ohms	Resistance Measured
✦	Pin 2 (U6)	Pin 3 (U10)	Sine Wave	VR5 CCW 14.7kΩ	
✦	Pin 2 (U6)	Pin 3 (U10)	Sine Wave	VR5 CW 4.7kΩ	
	Pin 13 (U6)	Pin 14 (U6)	Sine Wave	200Ω	
	Pin 3 (U6)	GND (B1)	Mult	VR8 CCW < 10Ω	
✦	Pin 3 (U6)	GND (B1)	Mult	VR8 CW 100kΩ	
	Pin 4 (U6)	+12V (B3)	VCC	Less than 3Ω	
✦	Pin 7 (U6)	–12V (B2)	Fine Freq Adj	VR7 CCW 108.2kΩ	
	Pin 7 (U6)	–12V (B2)	Fine Freq Adj	VR7 CW 8.2kΩ	
	Pin 12 (U6)	–12V (B2)	GND	Less than 3Ω	

✦30% CCW - Counter-Clockwise CW - Clockwise

VR8

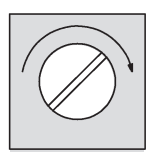

U10

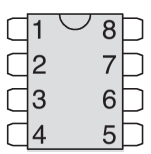

U6

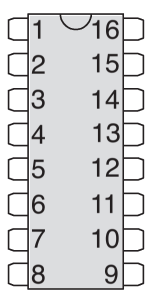

FINAL ASSEMBLY

If you are immediately going to build the remaining sections, do not continue with the instructions on this page and proceed to page 22.

❒ Fasten the front panel in place with four #6 x 3/8" thread cutting screws, as shown in Figure BB.

❒ Fasten the PC board to the spacer on the front panel with a fiber washer and a 4-40 x 1/4" screw (from Power Supply Section) from the foil side of the PC board, in the location shown in Figure CC.

❒ Fasten the pots to the front panel with an 8mm washer and a 7mm nut, as shown in Figure BB.

❒ Turn the shafts on the two switches fully counter-clockwise. Push the knobs onto the shafts so that the line on the knob is in line with the end of the circle on the front panel (see Figure DD). If the knob is loose on the shaft, insert a screwdriver into the slot and expand the slot slightly (see Figure EE).

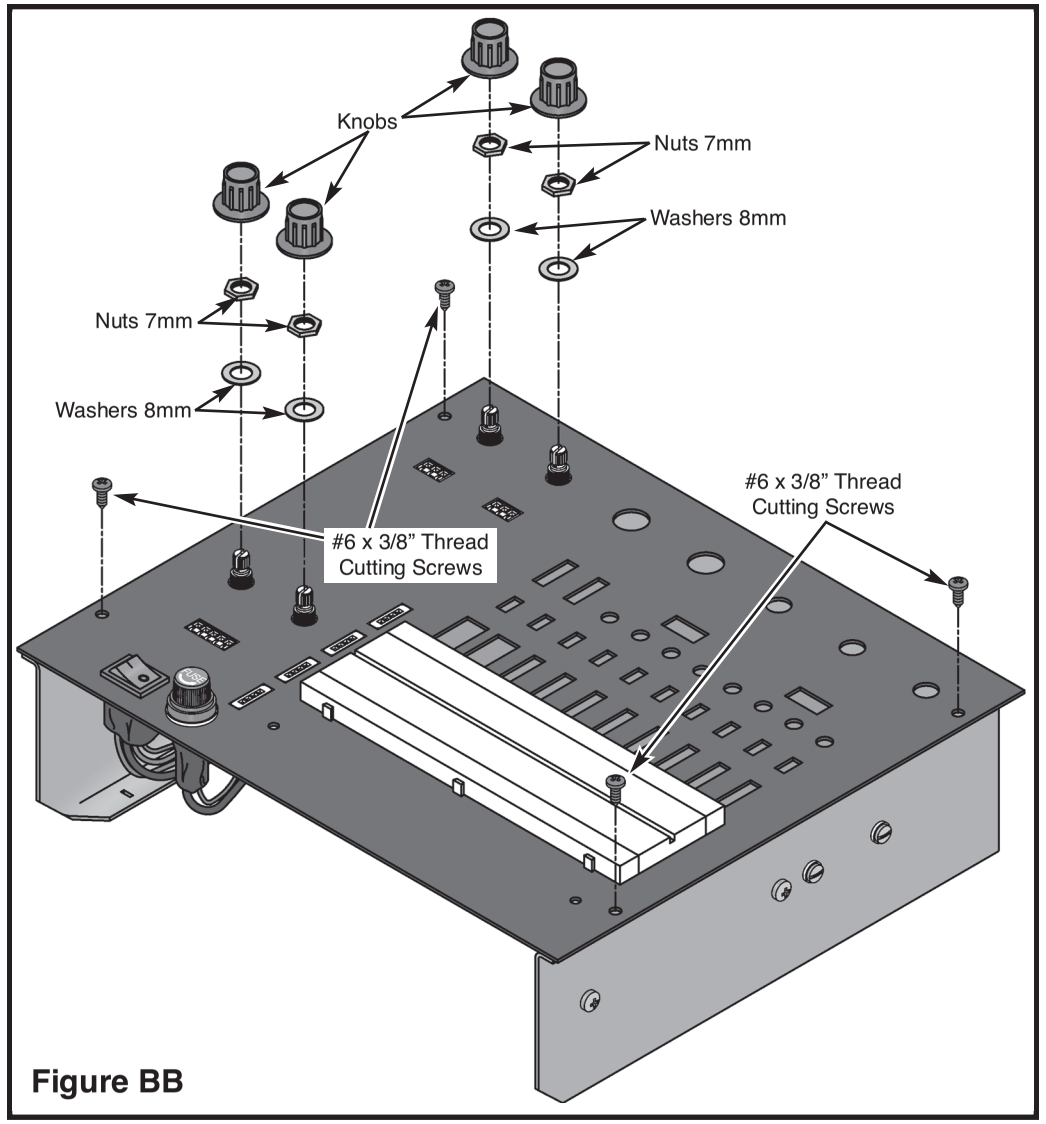

Figure BB

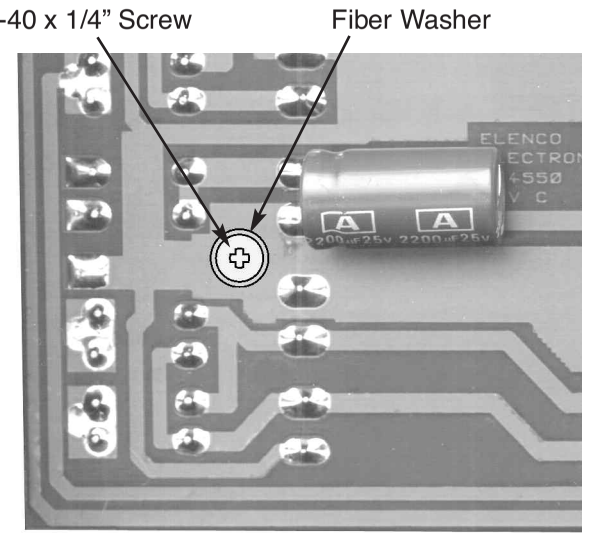

Figure CC

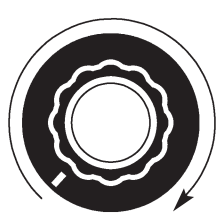

Figure DD

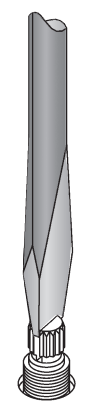

Figure EE

INSTALL COMPLETED UNIT INTO CASE

- ❒ Place the strain relief onto the line cord as shown in Figure FF.
- ❒ Squeeze the two sections together with pliers as shown in Figure GG. Then, insert the strain relief into the hole.
- ❒ Lay the trainer inside of the case as shown in Figure HH.
- ❒ Align the holes in the bottom case with those in the trainer and secure it into place with four #6 x 1/2" AB screws and four #6 washer as shown in Figure II.

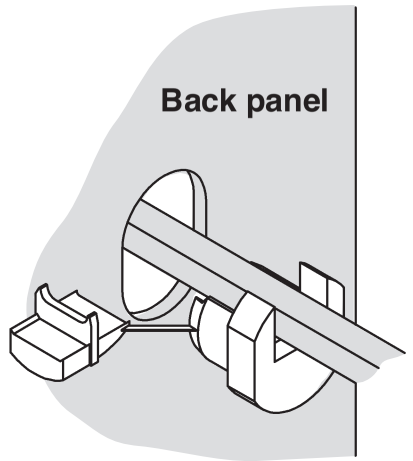

Figure FF

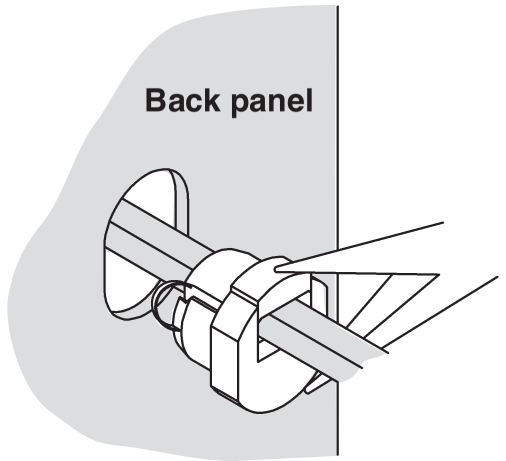

Figure GG

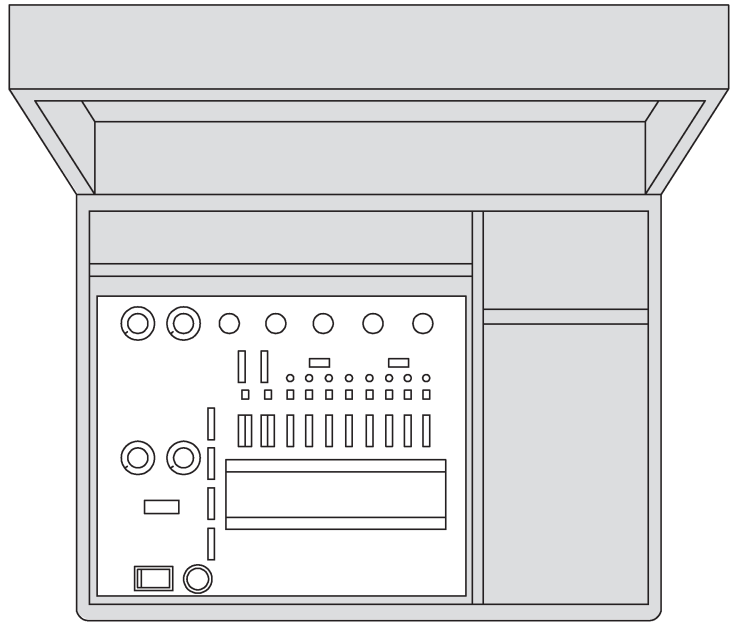

Figure HH

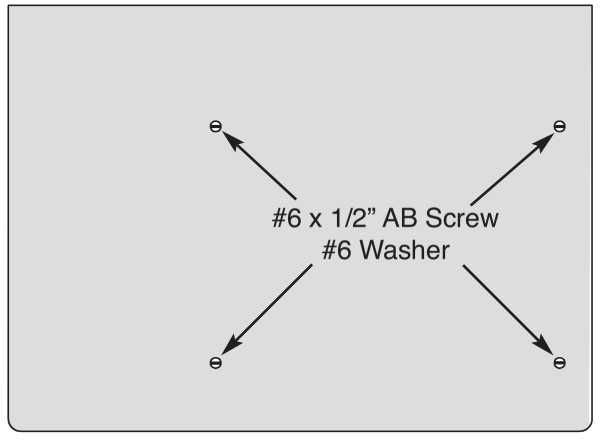

Figure II

INSTALL COMPONENTS TO PC BOARD

Start Here

- ☐ J18 - Jumper Wire (see Figure A)
- ☐ R13 - 8.2kΩ 5% 1/4W Resistor (gray-red-red-gold)
- ☐ J17 - Jumper Wire (see Figure A)
- ☐ C18 - .001μF (102) Mylar (see Figure EA)
- ☐ R6 - 12kΩ 5% 1/4W Resistor (brown-red-orange-gold)

Figure H

Mount down flush with PC board. The value may be marked on the back side of pot.

Cut off excess lead length after soldering.

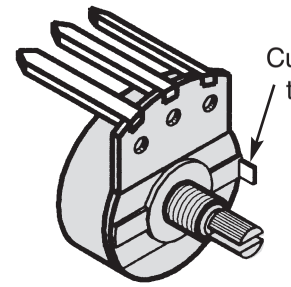

Potentiometers

Switches

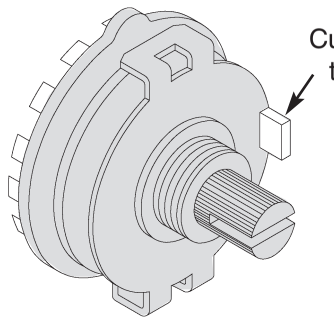

Figure I

Mount down flush with PC board.
Note: SW2 has 12 pins and SW3 has 16 pins.

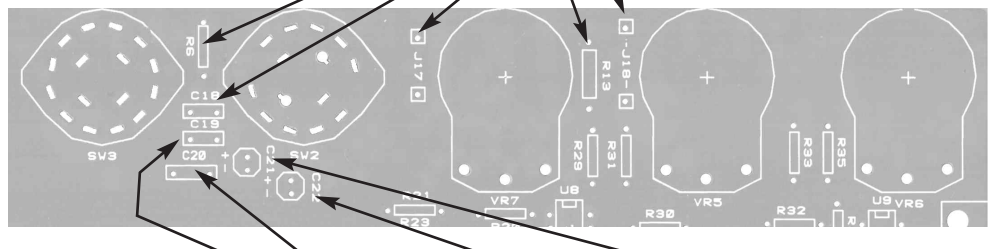

Continue

- ☐ C21 - 1μF 50V Electrolytic (see Figure D)
- ☐ C22 - 10μF 25V Electrolytic (see Figure D)
- ☐ C20 - .1μF (104) Mylar (see Figure EA)
- ☐ C19 - .01μF (103) Mylar (see Figure EA)

- ☐ VR6 - 100kΩ Pot (see Figure H)
- ☐ VR5 - 10kΩ Pot (see Figure H)
- ☐ VR7 - 100kΩ Pot (see Figure H)
- ☐ SW2 - SW Rotary 12-Pin (see Figure I)
- ☐ SW3 - SW Rotary 16-Pin (see Figure I)

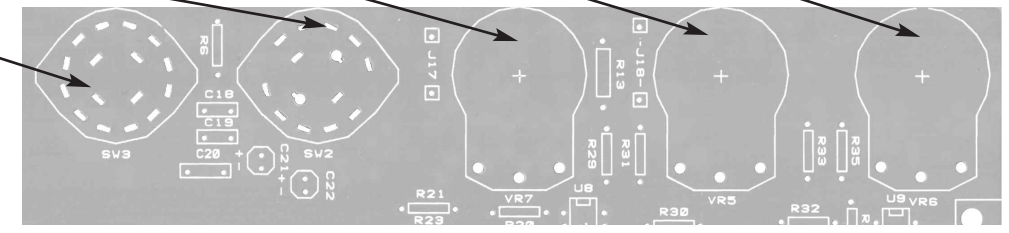

INSTALL COMPONENTS TO PC BOARD

Start Here

- ☐ B6 - 4-pin Bredblox (see Figure F)
- ☐ D16 - 1N4148 Diode (see Figure G)
- ☐ R14 - 100Ω 5% 1/4W Resistor (brown-black-brown-gold)
- ☐ B5 - 4-pin Bredblox (see Figure F)
- ☐ R12 - 1kΩ 5% 1/4W Resistor (brown-black-red-gold)
- ☐ R44 - 100Ω 5% 1/4W Resistor (brown-black-brown-gold)
- ☐ D17 - 1N4148 Diode (see Figure G)
- ☐ J23 - Jumper Wire (see Figure A)

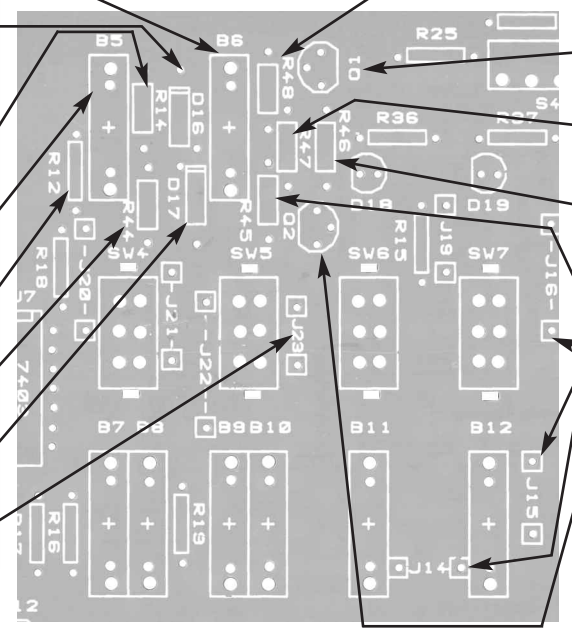

Continue

- ☐ R48 - 22kΩ 5% 1/4W Resistor (red-red-orange-gold)
- ☐ Q1 - 2N3904 Transistor (see Figure C)
- ☐ R47 - 330Ω 5% 1/4W Resistor (orange-orange-brown-gold)
- ☐ R46 - 330Ω 5% 1/4W Resistor (orange-orange-brown-gold)
- ☐ R45 - 22kΩ 5% 1/4W Resistor (red-red-orange-gold)
- ☐ J16 - Jumper Wire
- ☐ J15 - Jumper Wire
- ☐ J14 - Jumper Wire (see Figure A)
- ☐ Q2 - 2N3906 Transistor (see Figure C)

Figure E

Mount the trim pot to the PC board as shown below.

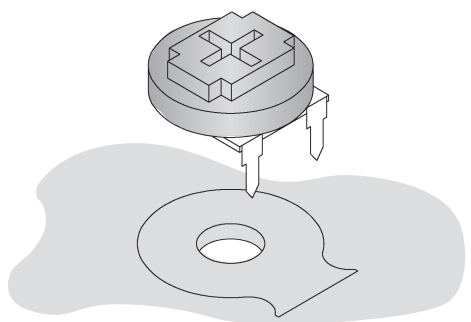

Figure EA

Bend the capacitors at a 45° angle before soldering it to the PC board.

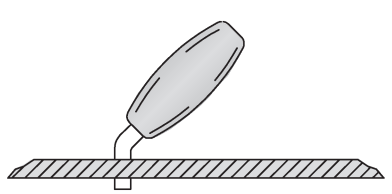

Figure F

Hold the bredblox down flush to the PC board from the top legend side and solder the metal pins in place. Then, melt the plastic pins with your soldering iron to hold the bredblox down as shown. Re-tin the solder tip afterwards.

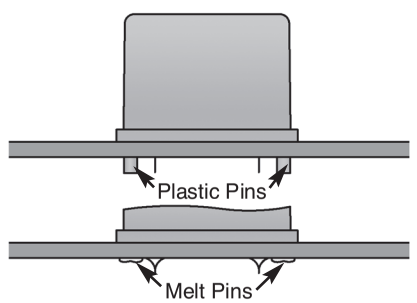

Figure G

Diodes have polarity. Mount with band in the direction shown on the PC board.

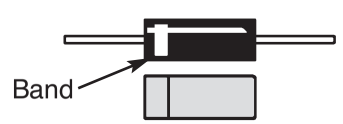

CIRCUIT DESCRIPTION

The power supply features two variable output voltages and three fixed 12V, –12V and 5V variable output voltages are 0V to 20V and 0 to –20V at up to 1 ampere maximum current. All supplies are regulated to better than 0.2V when going from no load to full load. Varying the input AC voltage from 105 to 135V will have practically no effect on the output voltages. This is because of the specially designed ICs used in the XK-700 Digital/Analog Trainer. Severe overloading or even shorting the output circuits will not damage the supplies. Special turn-off circuits in the ICs sense the overload and turn off the output.

THE POSITIVE 0 TO 20V POWER SUPPLY

Figure 1 shows a simplified circuit diagram of the positive supply. It consists of a power transformer, a DC rectifier stage and the regulator stage.

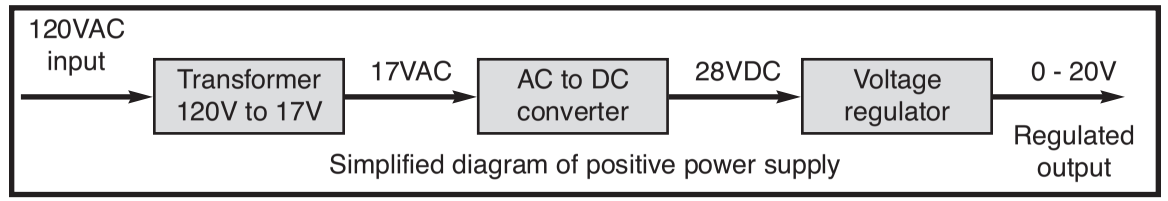

Figure 1

TRANSFORMER

The transformer T1 serves two purposes. First, it reduces the 120VAC input to 17VAC to allow the proper voltage to enter the rectifier stages. Second, it isolates the power supply output from the 120VAC line. This prevents the user from dangerous voltages should he or she be standing in a grounded area.

AC TO DC CONVERTER

The AC to DC converter consists of diodes D1, D3 and capacitor C1. Transformer T1 has two secondary windings which are 180 degrees out of phase. The output at each winding is shown in Figure 2A and 2B.

Diodes are semiconductor devices that allow current to flow in only one direction. The arrow in Figure 3 points to the direction that the current will flow. Only when the transformer voltage is positive will current flow through the diodes. Figure 3 shows the simplest possible rectifier circuit. This circuit is known as a half-wave rectifier. Here the diode conducts only half of the time when the AC wave is positive as shown in Figure 2C. Use of this circuit is simple but inefficient. The big gap between cycles require much more filtering to obtain a smooth DC voltage.

By the addition of a second diode and transformer winding we can fill in the gap between cycles as shown in Figure 4. This circuit is called full-wave rectification. Each diode conducts when the voltage is positive. By adding the two outputs, the voltage presented to capacitor C1 is more complete, thus easier to filter, as shown in Figure 2E. When used in 60 cycles AC input power, the output of a full wave rectifier will be 120 cycles.

Capacitor C1 is used to store the current charges, thus smoothing the DC voltage. The larger the capacitor, the more current is stored. In this design, 1000μF capacitors are used, which allows about 5 volts AC ripple when one amp is drawn.

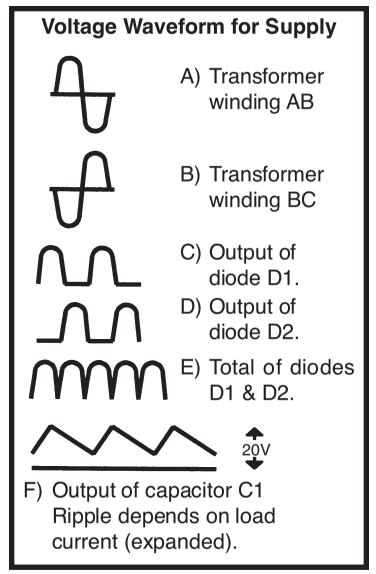

Figure 2

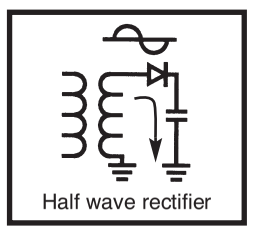

Figure 3

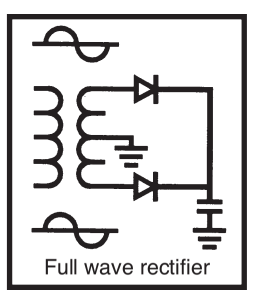

Figure 4

In practice, the current through the diodes is not as shown in Figure 2C. Because capacitor C1 has a charge after the first cycle, the diode will not conduct until the positive AC voltage exceeds the positive charge in the capacitor. Figure 5 shows a better picture of what the current flow looks like assuming no loss in the diode. It takes a few cycles for the voltage to build up on the capacitor. This depends on the resistance of the winding and the diode. After the initial start-up, there will be a charge and discharge on the capacitor depending on the current drawn by the output load. Remember, current only flows through the diode when the anode is more positive than the cathode. Thus, current will flow in short bursts as shown in Figure 5.

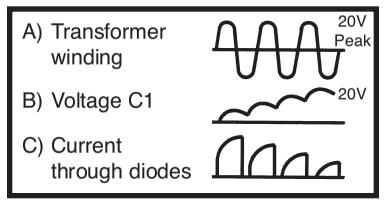

Figure 5

The DC load current may be one ampere, but the peak diode current may be three times that. Therefore, the diode rating must be sufficient to handle the peak current. The 1N4001 has a peak current rating of 10 amps.

REGULATOR CIRCUIT

The regulator circuit in the power supply consists of a LM-317 integrated circuit. This IC is specially designed to perform the regulation function. Figure 6 shows a simplified circuit of how the LM-317 IC works. Transistors Q1 and Q2 form a circuit known as a

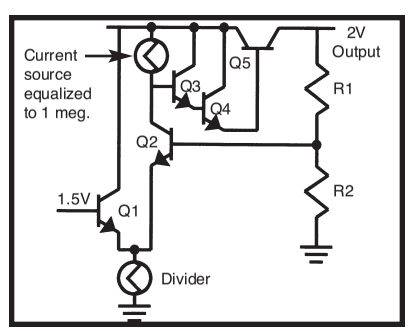

Figure 6

differential amplifier. The base of transistor Q1 is connected to a stable 1.5V reference voltage. The base of Q2 is connected to the regulator output circuit through a voltage divider network. The collector of transistor Q2 is connected to a current source. This basically is a PNP transistor biased to draw about 1mA of current. Transistor Q2 sees the current source as a very high resistor of about 1 meg ohms. Thus, the gain of transistor Q2 is extremely high.

Transistor Q5 is called the pass transistor. It controls the current reaching the output. Transistor Q3 and Q4 are emitter followers. Their function is to raise the impedance of the pass transistor. Note that transistors Q2, Q3, Q4, Q5 and resistor R1 form a closed loop. Also, note that the feedback to the base of Q2 is negative, that is, when the base of Q2 goes positive, the output at emitter Q5 goes negative. Now if the 2 volt output voltage goes down because of current drain at the output, the base of Q2 will drop, forcing the collector voltage to go higher. This will bring the output voltage back to 2 volts. This is the basis of all negative feedback regulators.

Another feature of the LM-317 regulator if to protect the IC against overload and output shorts. If the IC is overloaded, the junction of an overload transistor will overheat. A transistor will sense this overheating and shut down transistor Q5.

The LM-317 IC is basically a 1.25 volt regulator. To be able to vary the output from 0V to 20V, you stack the IC on the negative 1.25VDC voltage as shown in Figure 7. When VR1 equals 0, the output voltage is 0 volts.

THE NEGATIVE VOLTAGE REGULATOR

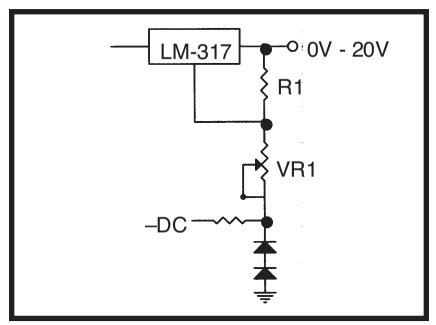

Figure 7

The theory of the negative regulator is the same as the previously discussed positive regulator. The basic difference is that diodes D1 and D3 are reversed, producing a negative voltage across capacitor C1. The LM-317 IC is designed to operate from a negative supply.

INSTALL COMPONENTS TO PC BOARD

Start Here

- ☐ J9 - Jumper Wire (see Figure A)
- ☐ C25 - .0022µF (222) Discap
- ☐ J10 - Jumper Wire
- ☐ J25 - Jumper Wire (see Figure A)
- ☐ VR8 - 100kΩ Trim Pot (see Figure E)
- ☐ C26 - 22pF (22) Discap
- ☐ C23 - 100pF (101) Discap
- ☐ J11 - Jumper Wire
- ☐ J12 - Jumper Wire
- ☐ J13 - Jumper Wire (see Figure A)
- ☐ U10 - IC socket 8-pin
- ☐ U10 - LM318 IC (see Figure B)
- ☐ R8 - 51kΩ 5% 1/4W Resistor (green-brown-orange-gold)
- ☐ R11 - 4.7kΩ 5% 1/4W Resistor (yellow-violet-red-gold)
- ☐ C27 - 5pF (5) Discap

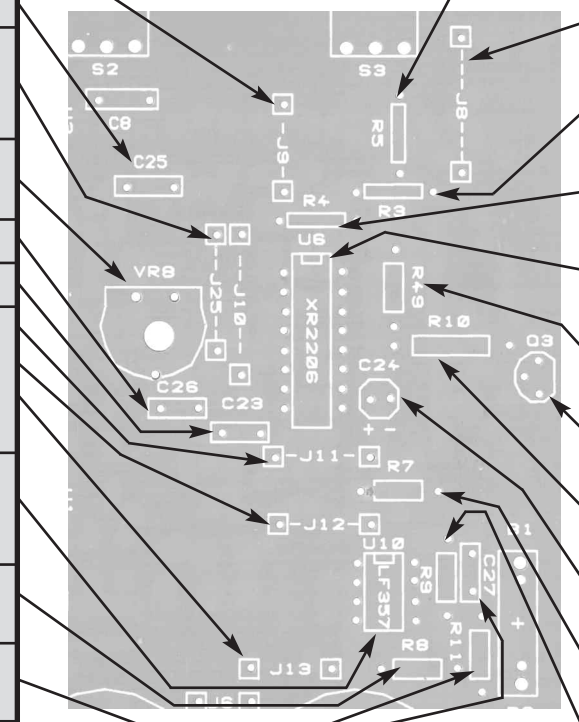

Continue

- ☐ R5 - 200Ω 5% 1/4W Resistor (red-black-brown-gold)
- ☐ J8 - Jumper Wire (see Figure A)
- ☐ R3 - 6.8kΩ 5% 1/4W Resistor (blue-gray-red-gold)
- ☐ R4 - 22kΩ 5% 1/4W Resistor (red-red-orange-gold)
- ☐ U6 - IC socket 16-pin
- ☐ U6 - XR2206 IC (see Figure B)
- ☐ R49 - 2kΩ 5% 1/4W Resistor (red-black-red-gold)
- ☐ Q3 - 2N3904 Transistor (see Figure C)
- ☐ R10 - 10kΩ 5% 1/4W Resistor (brown-black-orange-gold)
- ☐ C24 - 10µF 25V Lytic (see Figure D)
- ☐ R7 - 4.7kΩ 5% 1/4W Resistor (yellow-violet-red-gold)
- ☐ R9 - 47kΩ 5% 1/4W Resistor (yellow-violet-orange-gold)

Figure A

Cut a piece of bare wire long enough so that 1/4" of wire passes through each hole in the PC board after the wire is formed (provided in the second package).

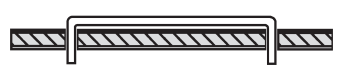

Figure B

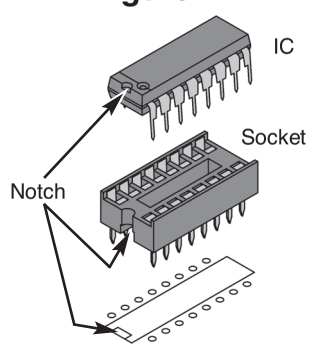

Insert the IC socket into the PC board with the notch in the direction shown on the top legend. Solder the IC socket into place. Insert the IC into the socket with the notch in the same direction as the notch on the socket.

Figure C

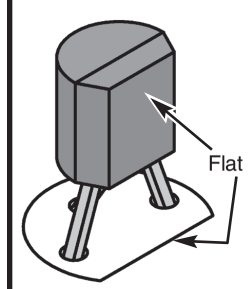

Mount the transistor with the flat side in the direction shown on the top legend.

Figure D

Electrolytics have a polarity marking on them indicating the negative (–) lead. The PC board is marked to show the lead positions.

Mount the capacitors horizontal to the PC board.
Bend the leads at right angles and then insert the leads into the PC board.

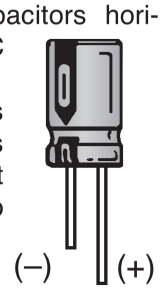

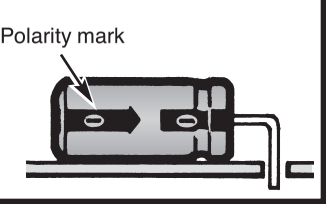

INTRODUCTION - ANALOG SECTION

The Analog Section of your trainer contains a complete function generator capable of producing sine, square, and triangle waveforms. The frequency of this generator can be continuously varied from 1 hertz to over 100,000 hertz in five steps: 10, 100, 1k, 10k, and 100k. A fine frequency control makes selection of any frequency in between easy. The amplitude of the waveforms are adjustable from 0-15Vpp. A waveform of function generator capable of producing sine, square and triangle waveform outputs has a wide range of applications in electrical measurements and laboratory instrumentation. This complete function generator system is suitable for experimentation and applications by the student. The entire function generator is comprised of a single XR-2206 monolithic IC and a limited number of passive circuit components.

SPECIFICATIONS

Waveforms - Sine, square, triangle and complementary square.
Frequency - 1Hz to 100kHz in 5 steps continuously variable.
Fine frequency adjust - 10:1 approximate.
Amplitude variable 0-15 Vpp.
Output impedance 330 ohms: short protected.
DC offset change 10V from zero crossing.

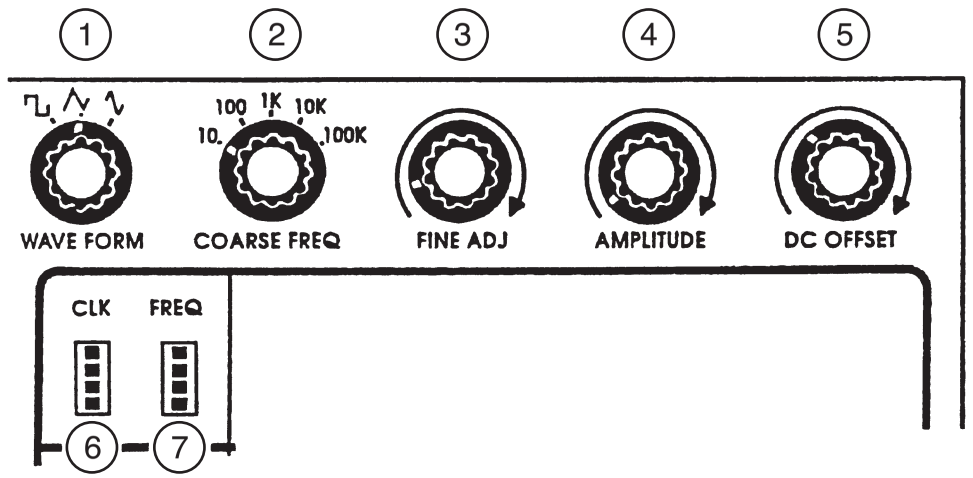

USERS DESCRIPTION OF FRONT PANEL CONTROLS

1. **WAVEFORM** - Selects square, triangle or sine waveform at the FREQ output.
2. **COURSE FREQUENCY** - Selects five ranges of frequencies 10, 100, 1k, 10k and 100k hertz.
3. **FINE FREQUENCY** - Allows easy selection of desired frequency according to the frequency range.
4. **AMPLITUDE** - Controls the amplitude of the FREQ output signal from 0-15Vpp.
5. **DC OFFSET** - Controls the DC level of the FREQ output signal. The DC level may be varied 10 volts from zero level.
6. **CLK** - A 4-pin output block for function generator's square wave. The amplitude of the signal is 5Vpp and frequency is dependent on WAVEFORM selection.
7. **FREQ** - A 4-pin output block for function generator's signals, output is dependent on WAVEFORM selection and frequency is set by COURSE FREQ control. The amplitude of the output is variable from 0-15Vpp.

SCHEMATIC DIAGRAM - POWER SUPPLY SECTION

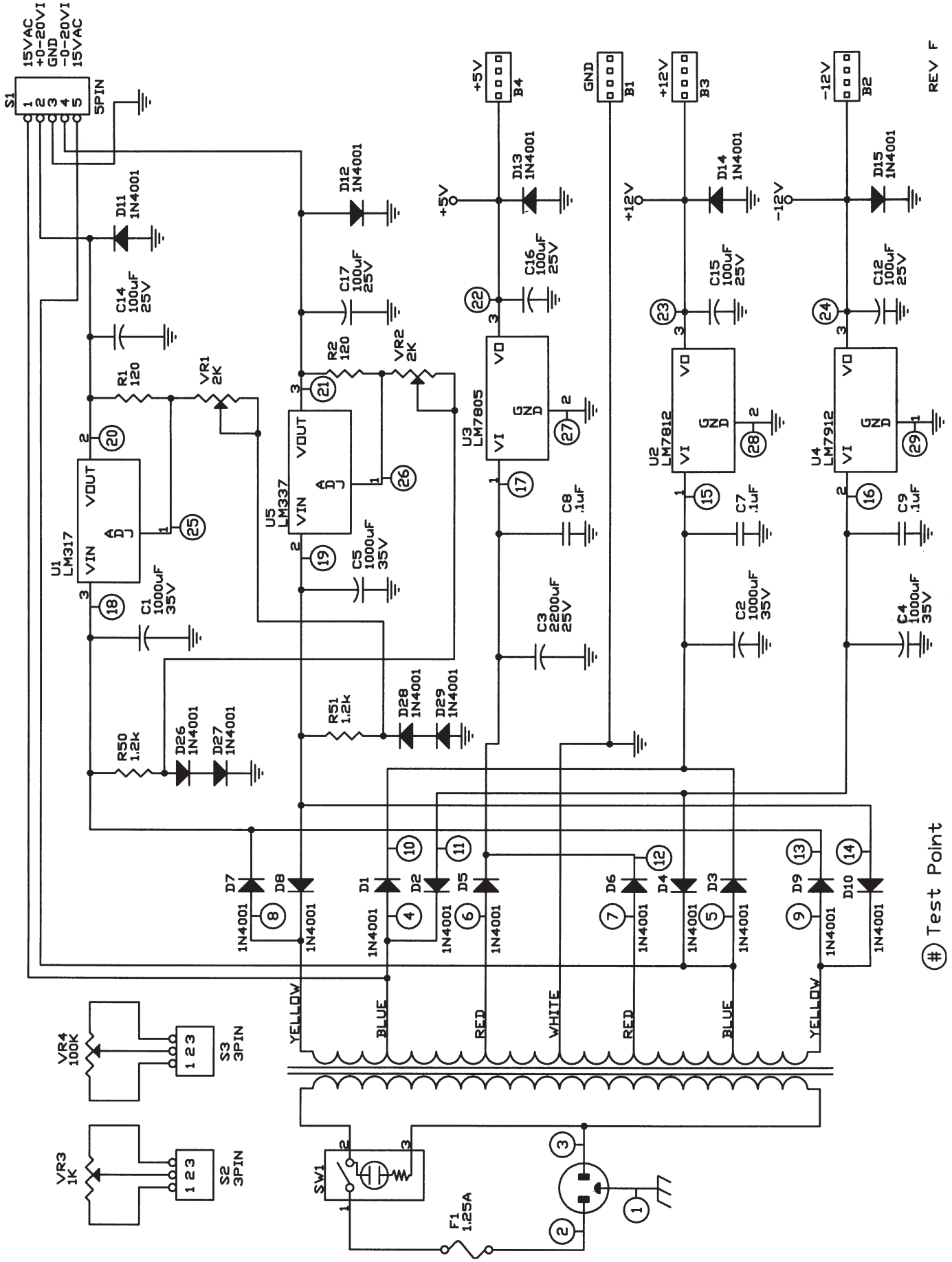

QUIZ - POWER SUPPLY SECTION

INSTRUCTIONS - Complete the following examination and check your answers carefully.

1. AC voltage is supplied to the rectifier stages by the . . .
   - ❒ A. step-up transformer.
   - ❒ B. step-down transformer.
   - ❒ C. 1 to 1 transformer.
   - ❒ D. AC to DC transformer.
2. The secondary windings of the transformer are . . .
   - ❒ A. 90° out of phase.
   - ❒ B. 180° out of phase.
   - ❒ C. 270° out of phase.
   - ❒ D. 320° out of phase.
3. Diodes allow current to flow . . .
   - ❒ A. when the anode is more negative than the cathode.
   - ❒ B. when the cathode is more positive than the anode.
   - ❒ C. in one direction.
   - ❒ D. when a negative or positive voltage is on the anode.
4. What circuit is more efficient for rectifying AC to DC?
   - ❒ A. Hartley oscillator.
   - ❒ B. Half-wave.
   - ❒ C. Schmitt trigger.
   - ❒ D. Full wave.
5. The DC voltage is smoothed by using a . . .
   - ❒ A. half-wave rectification circuit.
   - ❒ B. small value capacitor with a high voltage value.
   - ❒ C. Large value capacitor.
   - ❒ D. 90° out of phase.
6. An inefficient rectification circuit usually contains . . .
   - ❒ A. large gaps between cycles.
   - ❒ B. twice the AC voltage needed.
   - ❒ C. more diodes.
   - ❒ D. all of the above.
7. The maximum current that a diode can handle is determined by . . .
   - A. the transformer's current rating.
   - B. the amount of AC ripple.
   - C. three times the diode rating.
   - D. peak current rating.
8. The LM-317 will shut down when . . .
   - ❒ A. the output voltage is too high.
   - ❒ B. no current is being drawn.
   - ❒ C. the junction overheats.
   - ❒ D. the output voltage drops to 1.25V.
9. The LM-317 regulator contains . . .
   - ❒ A. a pass transistor.
   - ❒ B. a constant current source.
   - ❒ C. a differential amplifier.
   - ❒ D. all of the above.
10. The LM-317 is basically . . .
    - ❒ A. a 1.25V regulator.
    - ❒ B. a 6.25V regulator.
    - ❒ C. a 2.5V regulator.
    - ❒ D. a negative voltage regulator.

Answers: 1. B; 2. B; 3. C; 4. D; 5. C; 6. D; 7. D; 8. C; 9. D; 10. A

AN-700-C

XK-700 ANALOG KIT (AN-700-C) PARTS LIST

RESISTORS

Qty.	Symbol	Value	Color Code	Part #
❒ 2	R14, R44	100Ω 5% 1/4W	brown-black-brown-gold	131000
❒ 1	R5	200Ω 5% 1/4W	red-black-brown-gold	132000
❒ 2	R46, R47	330Ω 5% 1/4W	orange-orange-brown-gold	133300
❒ 1	R12	1kΩ 5% 1/4W	brown-black-red-gold	141000
❒ 1	R49	2kΩ 5% 1/4W	red-black-red-gold	142000
❒ 2	R7, R11	4.7kΩ 5% 1/4W	yellow-violet-red-gold	144700
❒ 1	R3	6.8kΩ 5% 1/4W	blue-gray-red-gold	146800
❒ 1	R13	8.2kΩ 5% 1/4W	gray-red-red-gold	148200
❒ 1	R10	10kΩ 5% 1/4W	brown-black-orange-gold	151000
❒ 1	R6	12kΩ 5% 1/4W	brown-red-orange-gold	151200
❒ 3	R4, R45, R48	22kΩ 5% 1/4W	red-red-orange-gold	152200
❒ 1	R9	47kΩ 5% 1/4W	yellow-violet-orange-gold	154700
❒ 1	R8	51kΩ 5% 1/4W	green-brown-orange-gold	155100
❒ 1	VR8	100kΩ Trim Pot		191610
❒ 1	VR5	10kΩ Pot		192531
❒ 2	VR6, VR7	100kΩ Pot		192612

CAPACITORS

Qty.	Symbol	Value	Description	Part #
❒ 1	C27	5pF (5)	Discap	205010
❒ 1	C26	22pF (22)	Discap	212210
❒ 1	C23	100pF (101)	Discap	221017
❒ 1	C18	.001μF (102)	Mylar	231017
❒ 1	C25	.0022μF (222)	Discap	232216
❒ 1	C19	.01μF (103)	Mylar	241019
❒ 1	C20	.1μF (104)	Mylar	251017
❒ 1	C21	1μF 50V	Electrolytic	261047
❒ 2	C22, C24	10μF 25V	Electrolytic	271045

SEMICONDUCTORS

Qty.	Symbol	Value	Description	Part #
❒ 2	D16, D17	1N4148	Diode	314148
❒ 2	Q1, Q3	2N3904	Transistor PNP	323904
❒ 1	Q2	2N3906	Transistor NPN	323906
❒ 1	U10	LM318	Integrated circuit	330318
❒ 1	U6	XR2206	Integrated circuit	332206

MISCELLANEOUS

Qty.	Symbol	Description	Part #
❒ 1	SW2	Switch rotary 12-pin	542206
❒ 1	SW3	Switch rotary 16-pin	542405
❒ 5		Knob push-on	622009
❒ 3		Nut 7mm	644101
❒ 2		Nut 9mm	644102
❒ 3		Washer flat 8mm	645101
❒ 2		Washer flat 9mm	645103
❒ 1	U10	IC socket 8-pin	664008
❒ 1	U6	IC socket 16-pin	664016
❒ 2	B5, B6	4-Pin Bredblox	665204
❒ 1		Solder lead-free	9LF99