LUXOR | H.WILSON

04/10/15

Tools Required

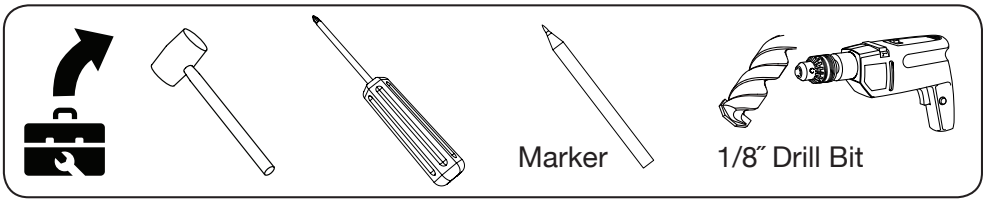

3 Shelf Presentation Station Instructions

w/ Cabinets, Pullout Shelves & Drop Leaf Shelf

Shelf Box

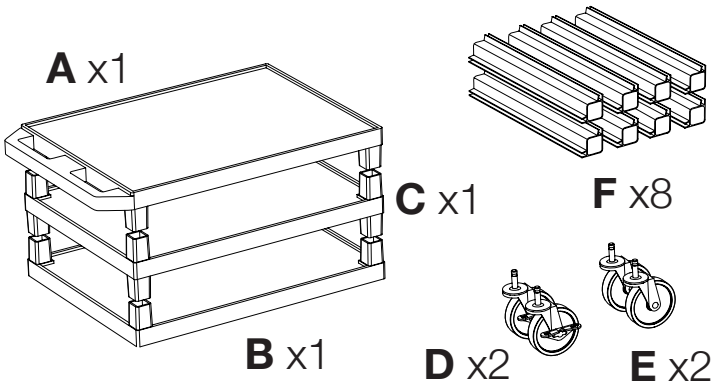

Cabinet Panel Box

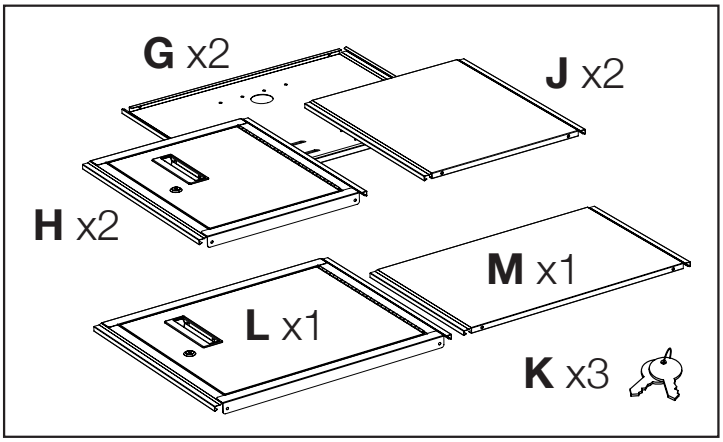

TKS Box

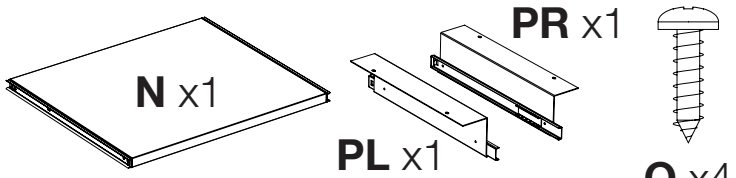

TDDS Box

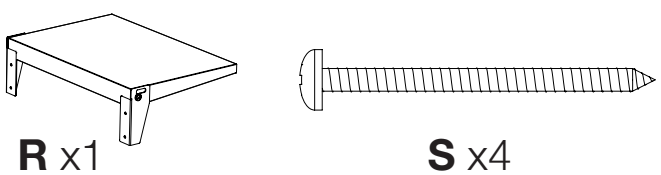

TPOS Box

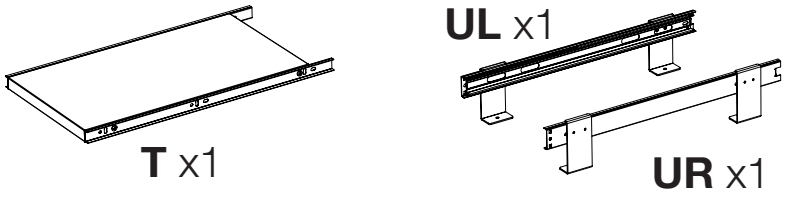

1

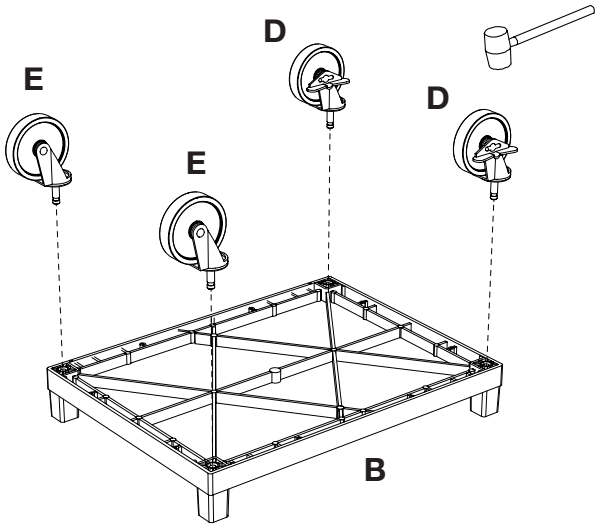

2 **IMPORTANT:** Flip shelf **B**, and lock the 2 locking casters **D** before assembling the unit.

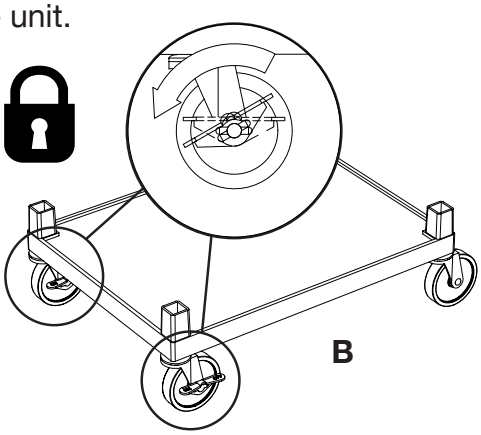

3

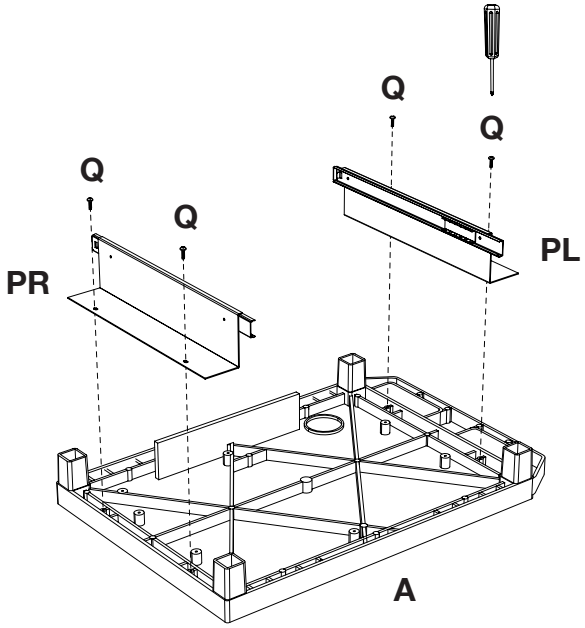

4 Slide keyboard tray **N** into tracks **PR** & **PL** until the track snaps and locks into place.

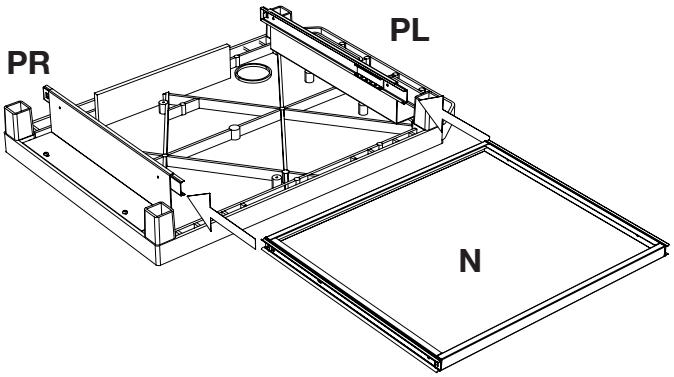

5

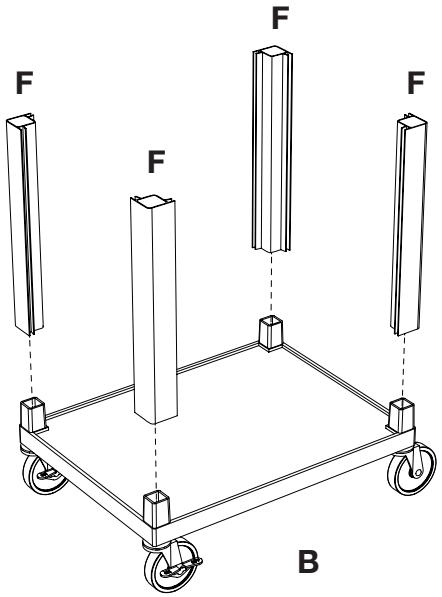

6

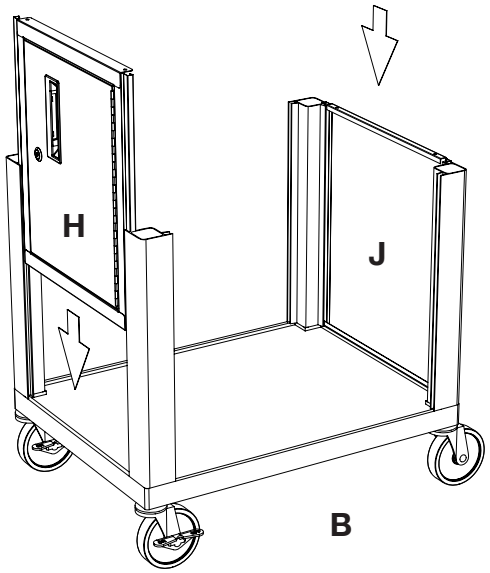

7

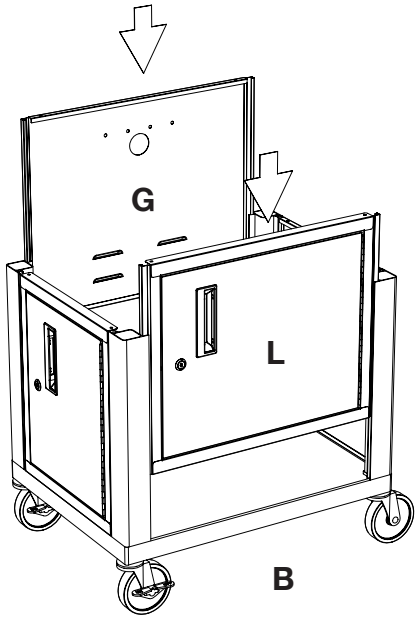

8

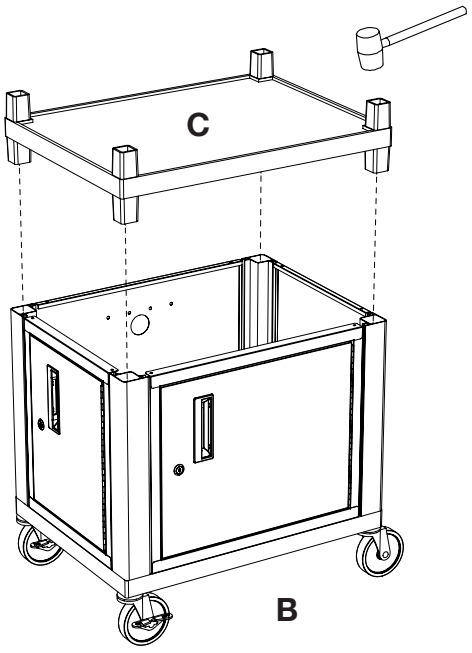

9

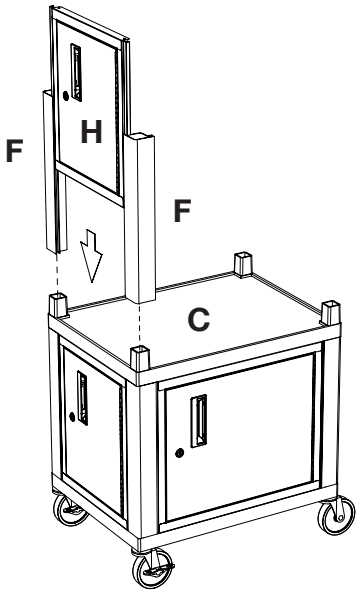

10 Slide pullout tray **T** into tracks **UL** & **UR** until the track snaps and locks into place.

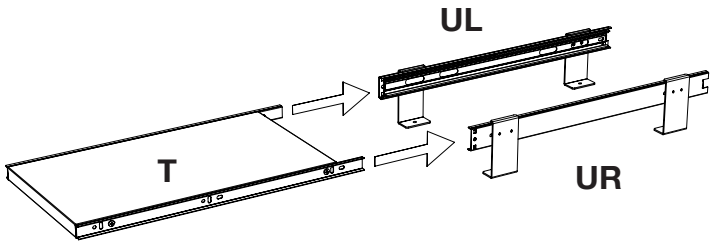

11 Making sure pullout shelf **T** can move freely between cabinet panel **H**. Use a marker to mark the four drill hole locations.

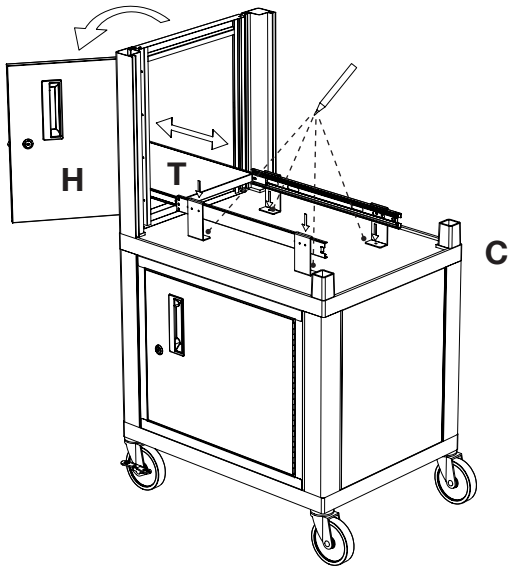

12 Drill Hole using the marked locations.

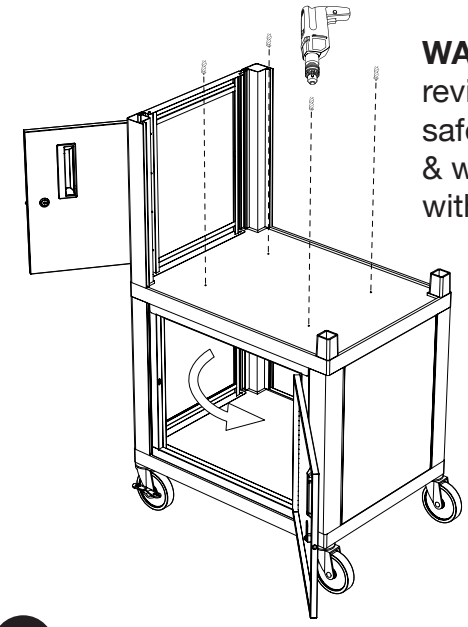

WARNING: Please review and follow all safety instructions & warnings included with your drill.

13

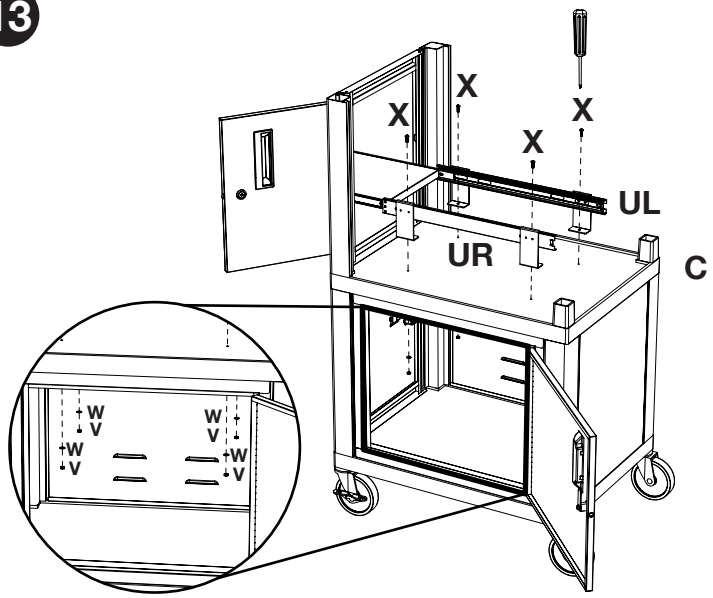

14

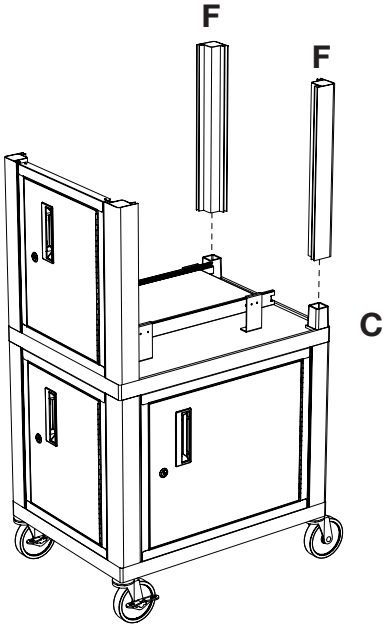

15

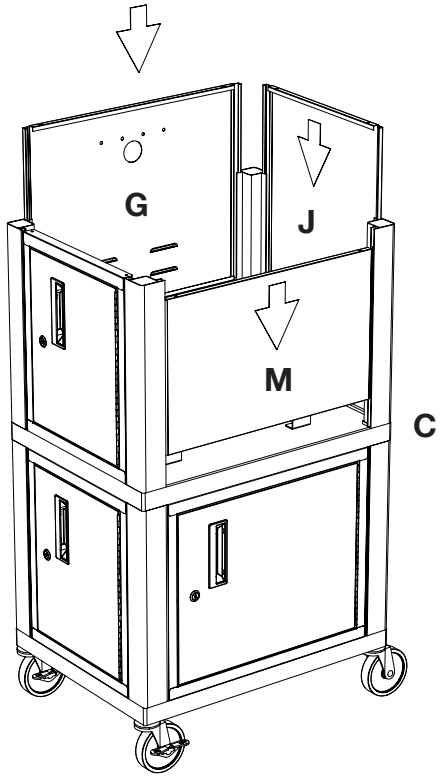

16

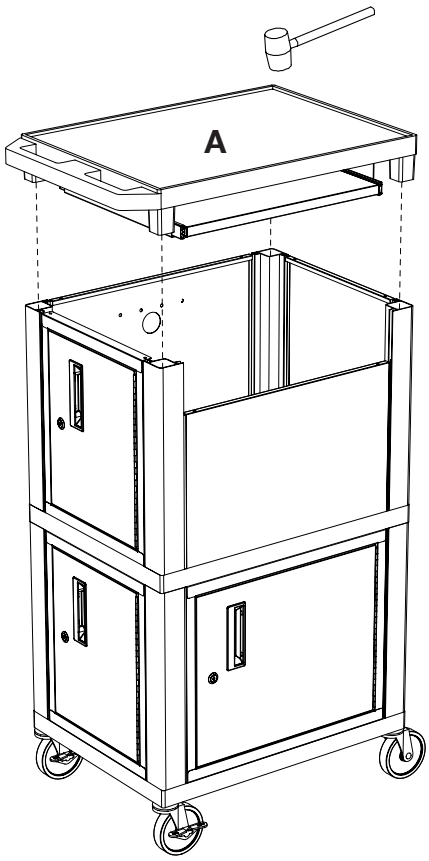

17 With the help of another person screw drop leaf **R** using screws **S** into the fluted legs **F**.

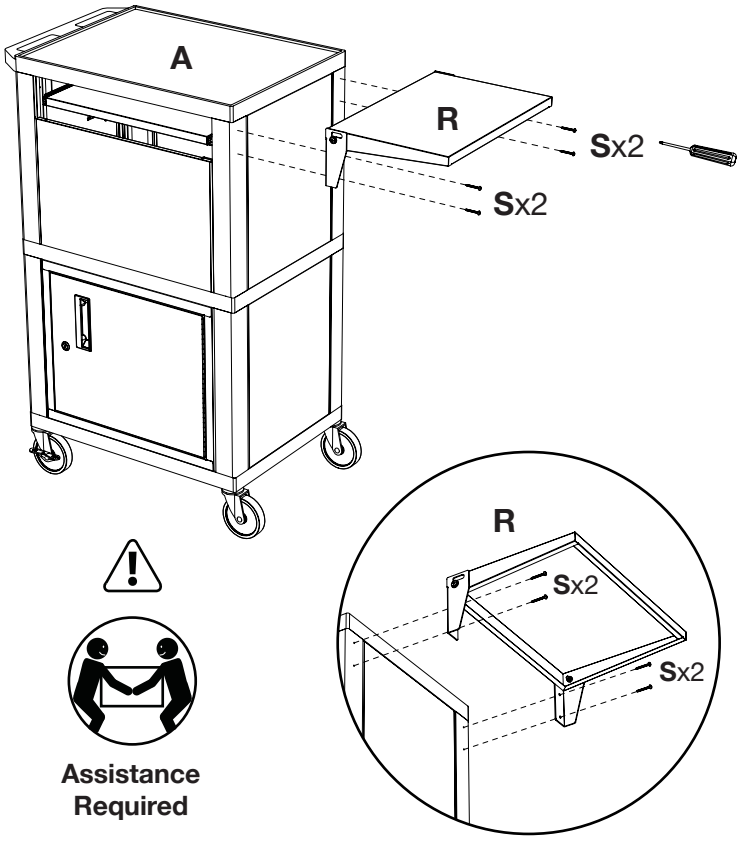

18 Assembly Complete.

