LUXOR | H.WILSON

3 Shelf Tuffy Cart Instructions

08/16/13

Parts List

Tools Required

- Rubber Mallet

NOTICE:
Leg lengths of leg **E** may be shorter than leg **F**

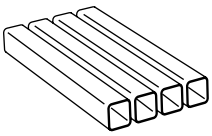

E x4

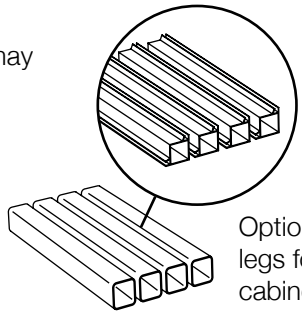

Optional fluted legs for units with cabinet pack

F x4

A x1

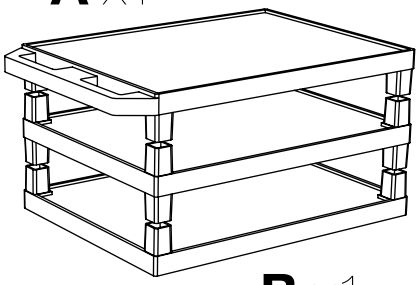

C x1

B x1

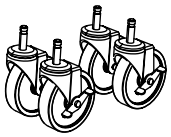

D x4

1

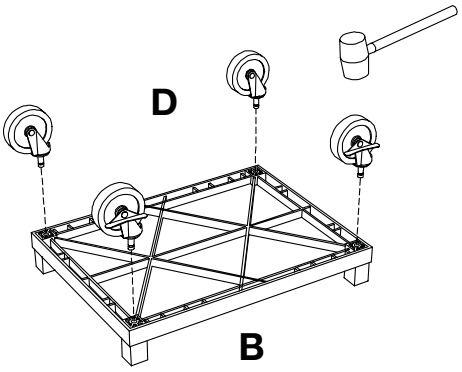

2 Install optional cabinet pack / pullout shelf / locking drawer assembly after step 1

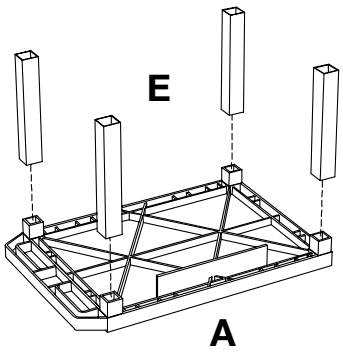

3

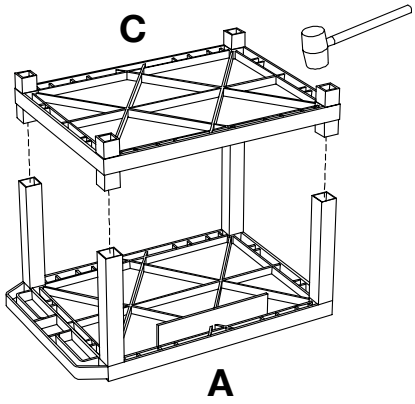

4

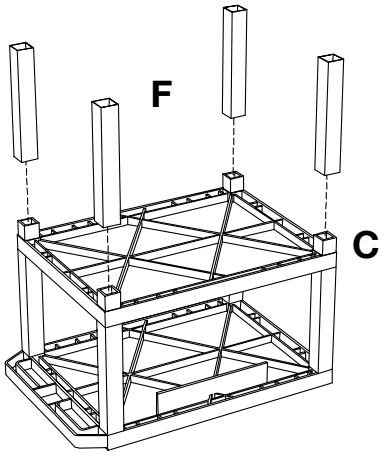

5

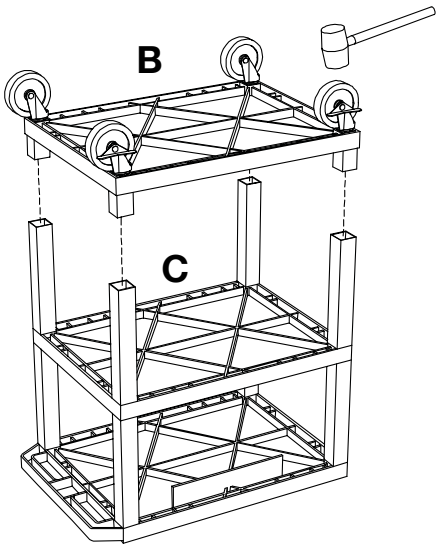

6

