LUXOR | H.WILSON

Presentation Station Instructions

02/19/14

Parts List

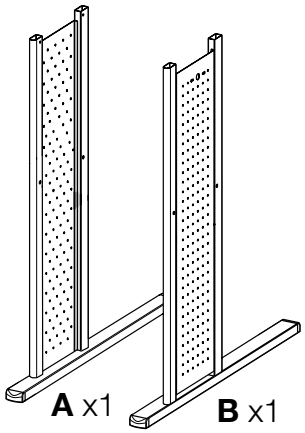

A x1 **B** x1



K x1



I x1

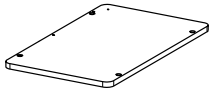

C x1

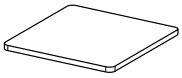

M x1



N x2

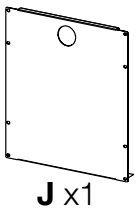

J x1

Tools Included

- Allen Wrench

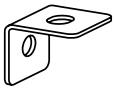

L x4



O x4

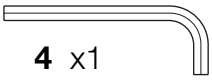

4 x1

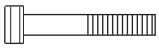

1 M8*50 x4

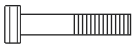

2 M6*28 x4

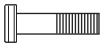

3 M6*10 x20

1

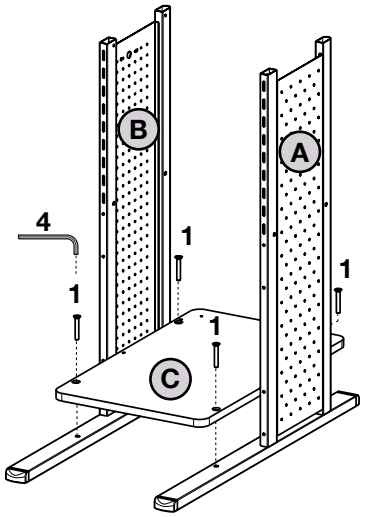

2

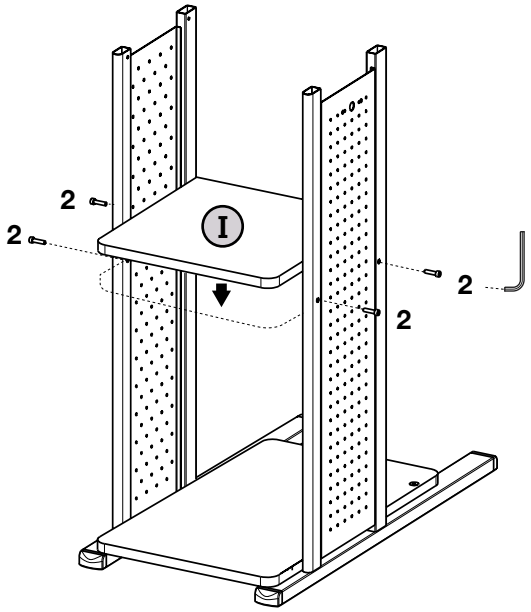

3

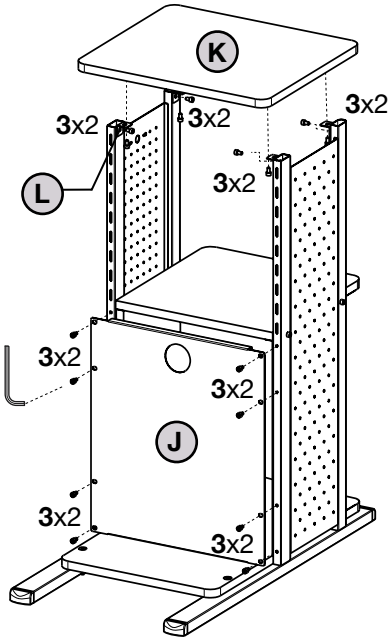

4

