WFST Installation Instructions

37”-63” Universal Flat Panel Display Tilted Wall Mount

Important Notes

THE WARRANTY WILL ONLY BE VALID IF YOU FOLLOW THE INSTRUCTIONS CAREFULLY.
Please do not begin installation until you have thoroughly read and understood these instructions.
Improper installation may cause serious injury and/or damage. It is recommended that a qualified contractor install the WFST Universal Tilted Wall Mount.
Make sure that the wall you plan to use will safely support four times the combined weight of the mounted equipment, including its accessories.
The WFST Universal Tilted Wall Mount supports LCD and Plasma Flat Panel Displays from 37" to 63" and supports a maximum load of 90.8 kg(200 lbs).
This products suits displays with 800mmx500mm(32" x20") mounting hole patterns.
A second person will be required to assist with several steps.
The manufacturer does not accept responsibility for incorrect installation.

Component Checklist

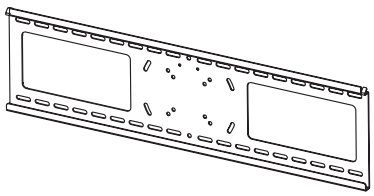

Wall Plate(x1)

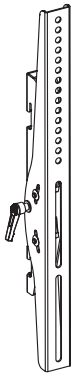

Left Hook Bracket(x1)

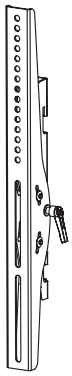

Right Hook Bracket(x1)

TOOLS REQUIRED:

- Power Drill
- 1/4” or 1/2” Drill Bit
- Phillips Head Screw Driver
- Spirit Level

Bits Bag



Lag Bolt 8*70mm(x4)



Metal washer Ø6 (x4)



Anchor(x4)



Spacer (x4)

Mounting Screws(Cross Recess)

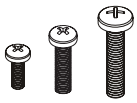

M5x16 mm (x4 each)
M6x16 mm (x4 each)
M8x35mm (x4 each)

Ⓐ Mounting the Wall Plate

Masonry Wall

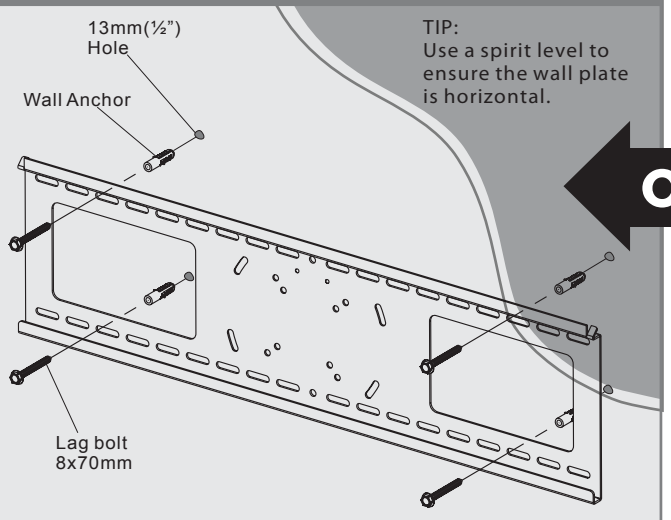

IMPORTANT:
Tighten lag bolts so that wall plate is firmly attached to wall, but DO NOT over tighten. The lag bolts can be damaged by over tightening which will strip their threading.
Final tightening oflag bolts should be done by hand using a ratchet wrench and socket.

OR

Timber Stud Wall

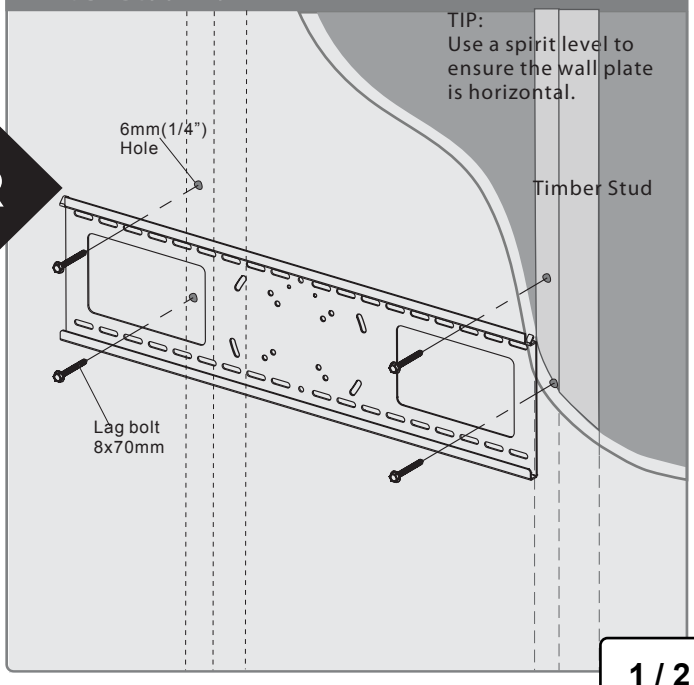

Ⓑ Attach the display

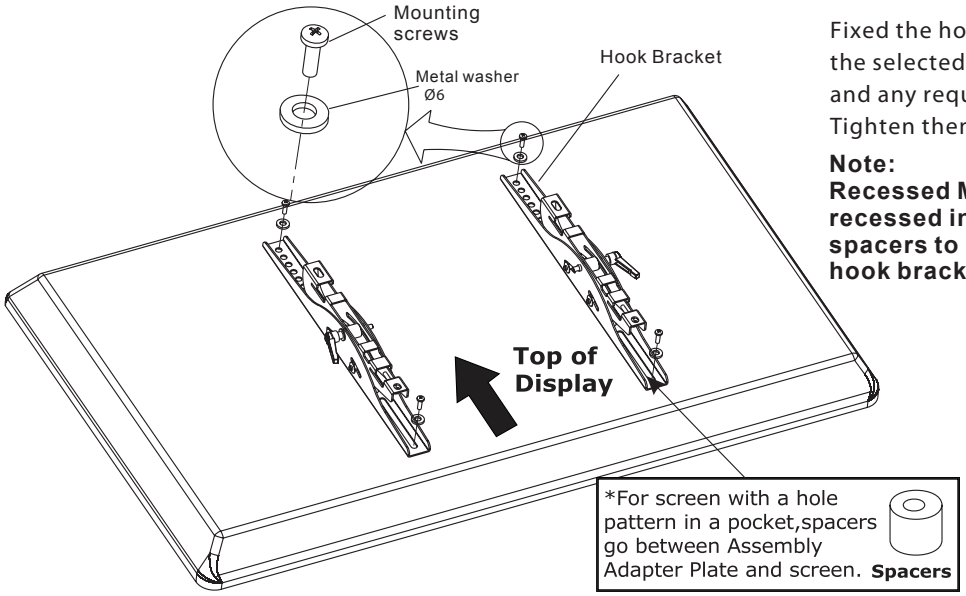

Fixed the hook bracket onto the display with the selected mounting screws, square washers, and any required spacers.
Tighten them using Philips head screw driver

Note:
Recessed Mounting Holes. If the mounting holes are recessed into the back of the display, use the supplied spacers to pack the recessed hole. Ensure that the hook brackets are securely fixed to the display.

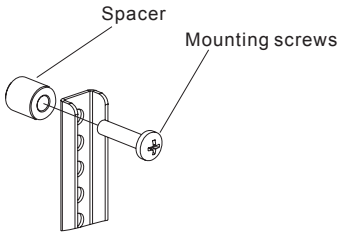

Ⓒ Attaching the display to the wall plate

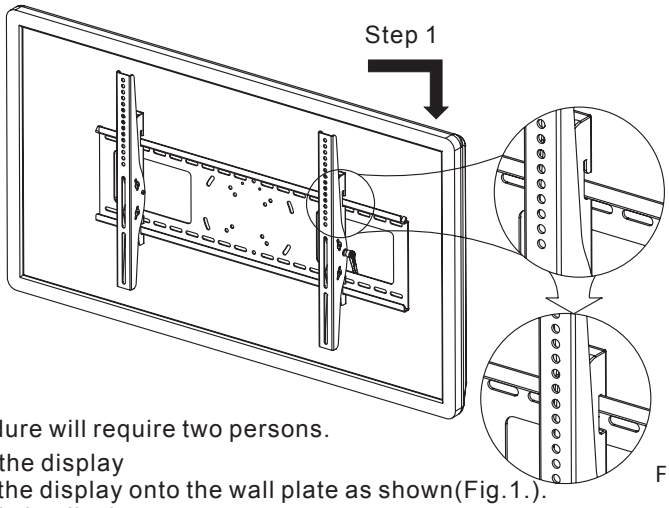

Fig.1.

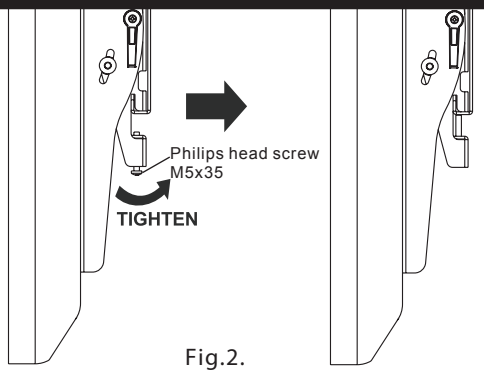

Fig.2.

Step 2

Note:
This procedure will require two persons.

Step 1: Lift the display
Lift the display onto the wall plate as shown(Fig.1.).

Step 2: Lock the display
Tighten the Philips head screw M5x35 until attach the wall plate as shown(Fig.2.).

Note:
For demonstration purposes, the wall has been omitted from the above images.

Ⓓ Adjusting the display

Tilt Adjustment -Raising or lowering the screen to improve viewing angle.

Grasp the upper and lower edges of the display, and then turn it to the desired tilt angle(Fig.3.).
To lock the tilt angle, tighten the tilt knob(Fig.4.) securely.

Note: For heavier displays, never fully release the tilt knob without fully supporting the display.

The tilt lever includes a ratchet function, so that it can be lifted and repositioned for next turn. To operate the ratchet, pull the lever and then turn it in the desired direction. Repeat as necessary until the tilt tension is set properly(Fig.5.).

Installation complete!
Now, you can enjoy your display!

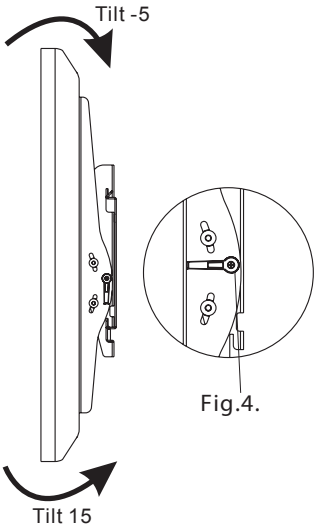

Fig.3.

Fig.4.

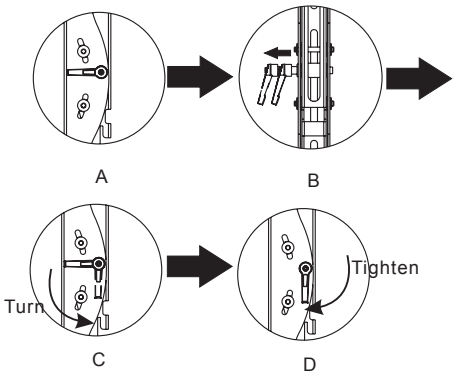

Fig.5.