LUXOR | H.WILSON

02/05/13

www.luxorfurn.com
www.hwilson.com

Fixed Height Metal Cart Instructions

AV42, AV34, AV26,
W42, W34, W26

Parts List

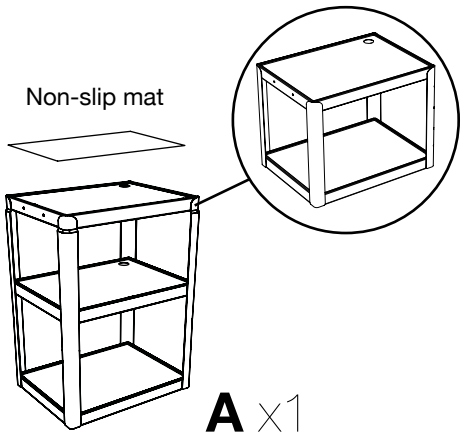

A x1

Optional cart with two shelves

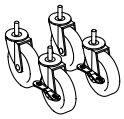

B x4

Tools Required

- Rubber Mallet

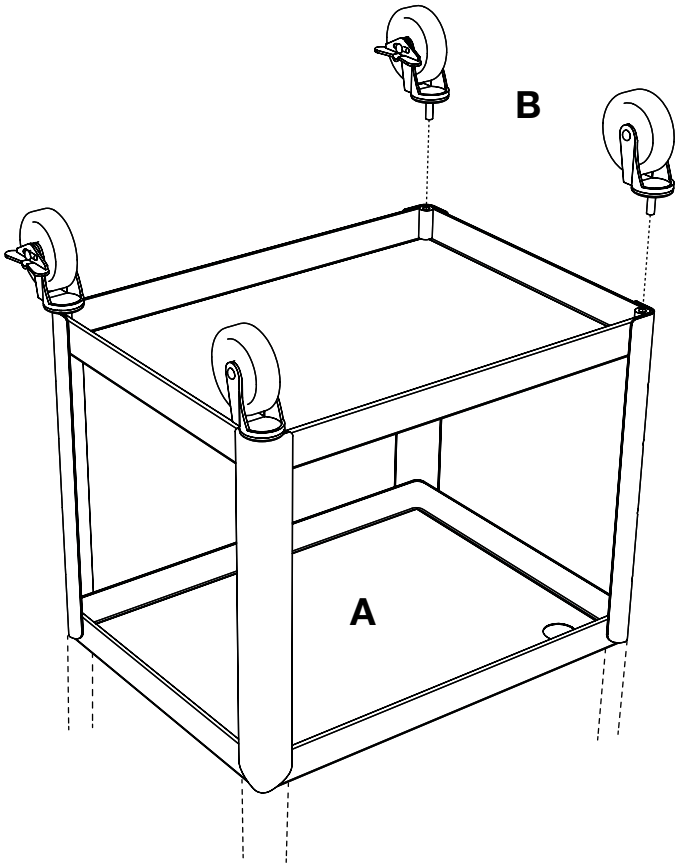

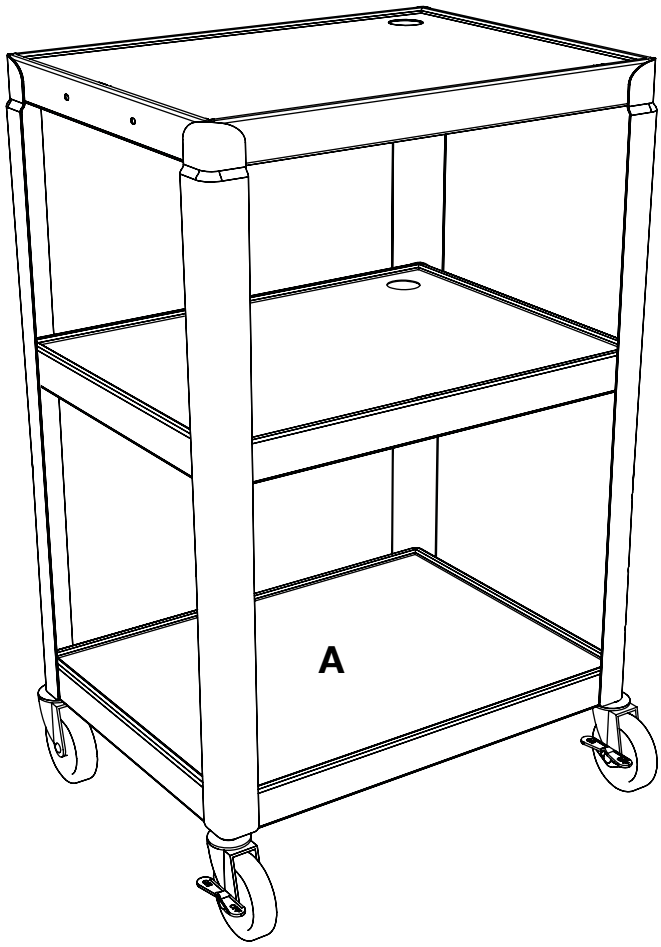

1

Position the cart frame **A** so that the caster holes are facing up. Insert caster **B** into the caster holes on the bottom of **A**. Use a mallet to set the casters properly.

2

Flip cart frame **A** . Place Non-slip mat on desired shelf. The cart is now complete.