LUXOR | H.WILSON

STC22

Flat shelf Utility Cart



STC22-B

24″W x 18″D x 33″H

Red Blue Gray Putty Black

- Multipurpose utility cart ideal for use as a serving or storage cart
- Measures 24″W x 18″D x 33″H with a clearance between shelves of 26″ for easy access
- Includes two falt shelves with .25″ retaining lip to secure items from sliding off
- Ergonomic push handle molded into the top shelf
- Four 4″ Heavy-Duty non-marring casters, two with locking brake
- Shelves and legs are constructed with an injection molded thermoplastic resin, which will not stain, scratch, dent or rust
- Maximum weight capacity of 300 lbs. (evenly distributed)

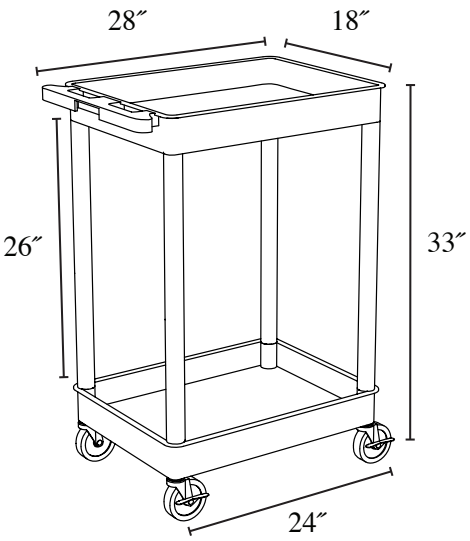

MADE IN USA

LIFETIME WARRANTY