LUXOR | H.WILSON

Presentation Station Instructions

10/15/13

Parts List

E1 x1

D1 x1

F x1

D2 x1

E2 x1

A x1

B x1

C x1

Tools Required

- Screwdriver

5 x1

1 x8

2 x4

3 x8

4 x4

6 x2

7 x2

1

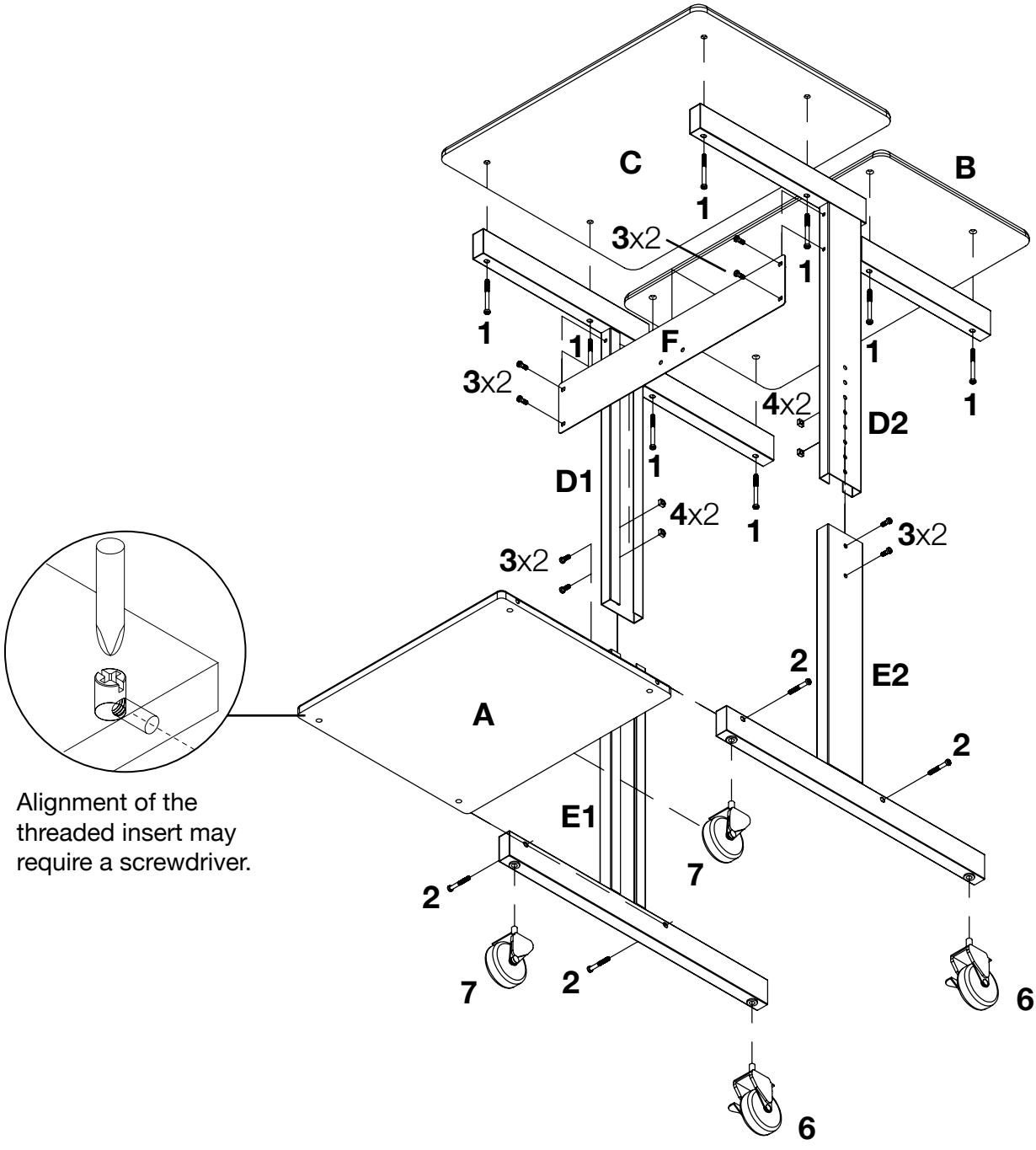

Alignment of the threaded insert may require a screwdriver.