LEVEL UP 32 STANDING DESK CONVERTER

Product Specifications

Item Number	LVLUP32-BK
Dimensions	31.5" W x 22.25" D x 2.75"–15.75" H
Frame Make	Steel
Frame Color Finish	Black or White
Weight	34.60 lbs.
Shelf Make	MDF w/ PVC wrap
Shelf Dimensions	31.5" W x 22.25" D
Height Adjustment Increments	Any height between 2.75"–15.75"
Weight Capacity	20 lbs.
Meets ANSI/BIFMA	Yes
Shipping Method	Ground
Shipping Carton Dims	35" x 26" x 4"
Shipping Weight	40 lbs.
Assembly Reqired	No

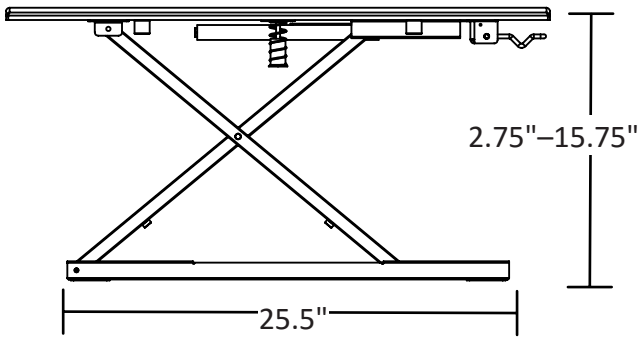

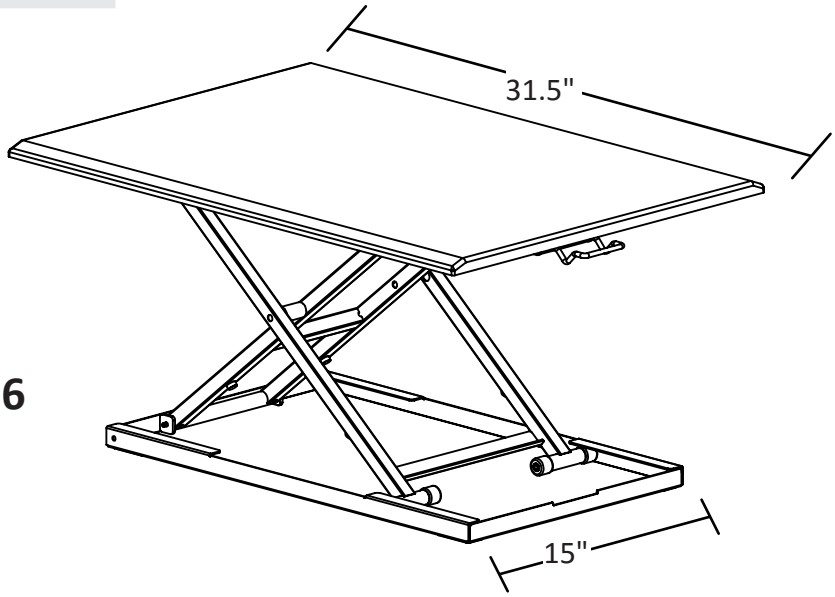

To Order, Call Your Sales Representative or 800-323-4656

2245 Delany Road, Waukegan, IL 60087
800-323-4656 | Fax 847-244-1818 | www.LuxorFurn.com

LUXOR
INNOVATIVE WORKSPACE PRODUCT SOLUTIONS