LUXOR | H.WILSON

3 Shelf LP+LE DUO Instructions

07/11/13

Parts List

Tools Required

- Rubber Mallet

NOTICE:
Leg lengths may vary by model

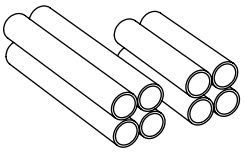

E x8

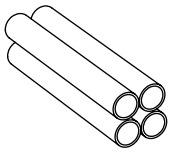

F x4

A x1

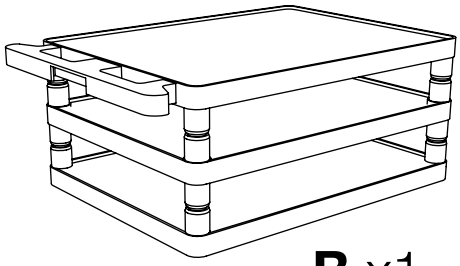

B x1

C x1

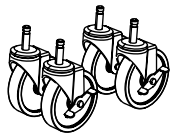

D x4

1

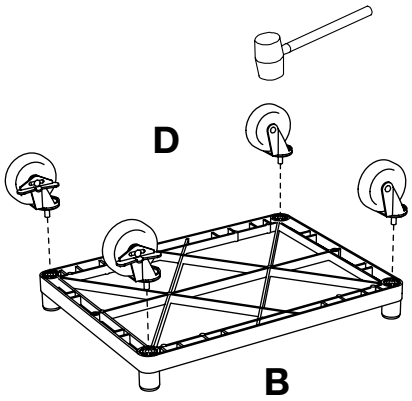

2 Install optional cabinet pack / pullout shelf / electrical assembly after step 1

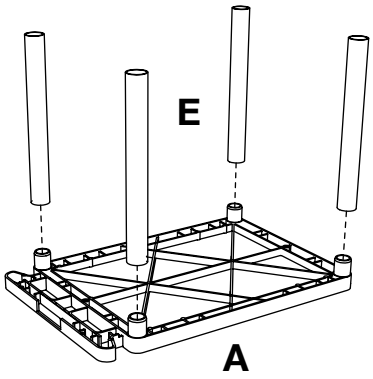

3

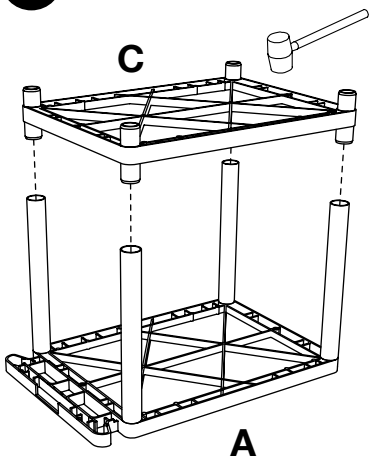

4

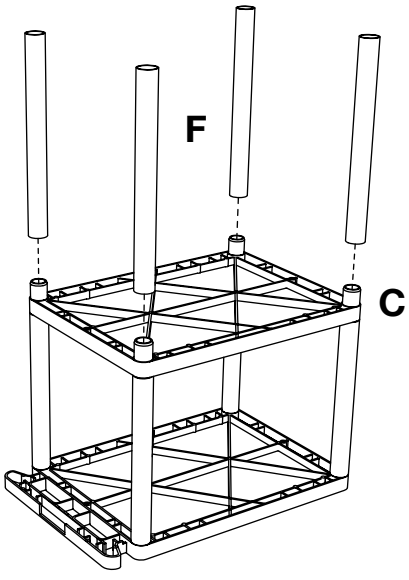

5

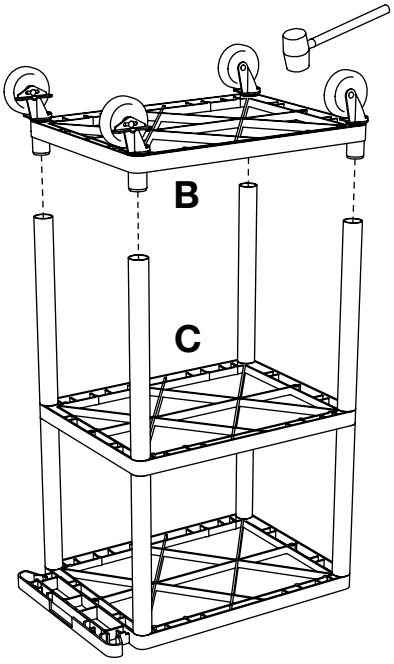

6

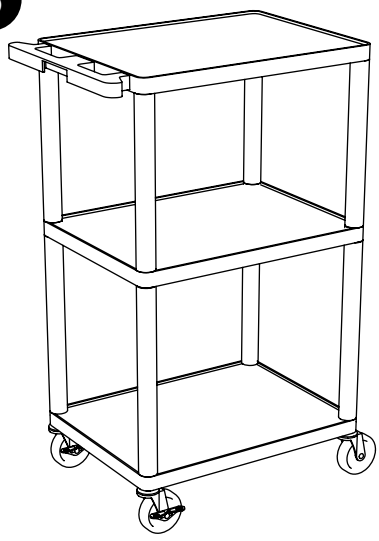

LUXOR | H.WILSON

02/22/13

www.luxorfurn.com
www.hwilson.com

LP + LE Electrical Assembly Instructions

Parts List

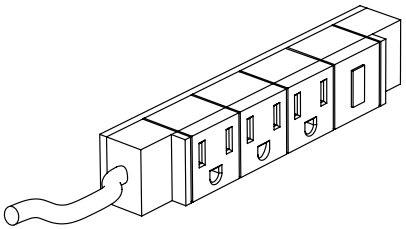

F x1

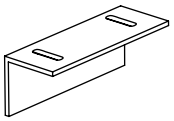

G x1

Tools Required

- Philips Screwdriver

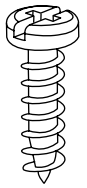

H x3

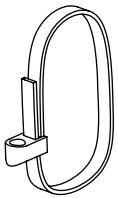

J x1

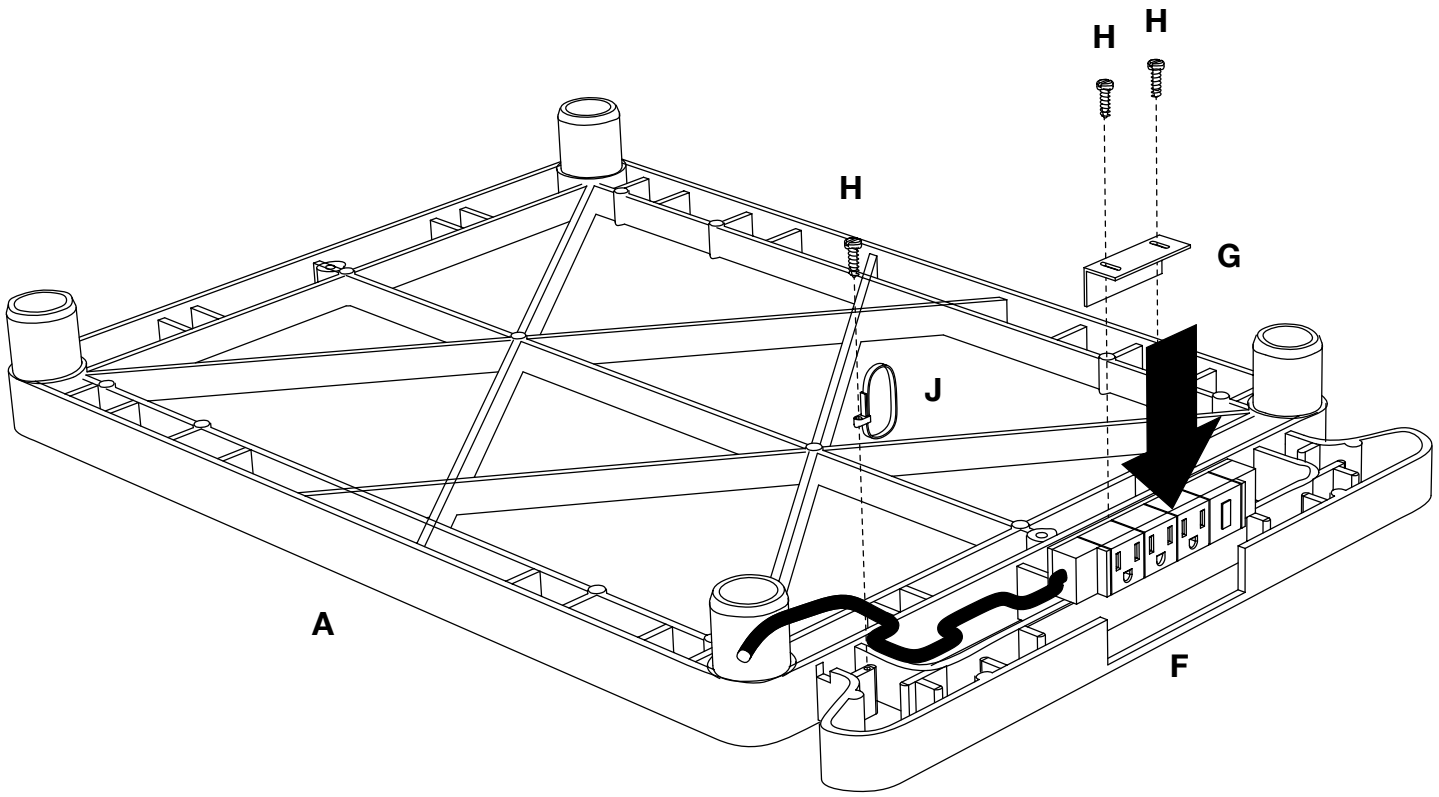

1 Attach electric outlet **F** to top shelf **A**, secure with L bracket **G** and cable lock **J**. Loop outlet cable **F** through cable lock **J** and the inserts on shelf **A**. Screw L bracket **G** and cable lock **J** onto top shelf **A** with screw **H** and a philips screwdriver.