LUXOR | H.WILSON

LPDUO-B

Heavy Duty A/V Cart



LPDUO-B
24″W x 18″D x 34″ - 42″H

MADE IN USA



LPDUOCE-B
24″W x 18″D x 34″ - 42″H

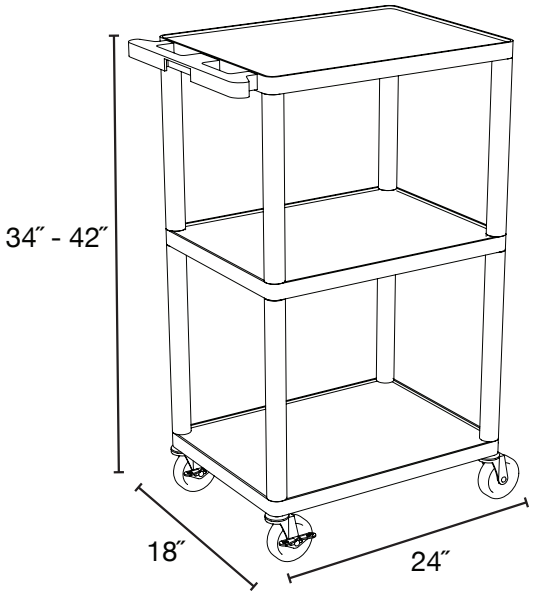

- Multipurpose utility cart perfect for use with audio/video equipment and more
- Measures 24″W x 18″D x 34″- 42″H
- .25″ retaining lip borders flat shelves to ensure minimal sliding
- Includes locking cabinet made from 20-gauge steel with powder coat paint finish, full piano door hinges with a set of two keys
- Cabinet inner dimensions measure 23¼″W x 16¾″D x 18″H
- Ergonomic push handle molded into the top shelf for optimum comfort
- Four 4″ Heavy-Duty non-marring casters, two with locking brake, for mobility and stability
- Molded plastic shelves and legs won't stain, scratch, dent or rust
- Three-outlet surge surpressing 15″ cord and cord management system to keep cart clean and organized
- Maximum weight capacity of 400 lbs. (evenly distributed)

LIFETIME WARRANTY