LUXOR | H.WILSON

LP42-B

Heavy Duty A/V Cart



LP42E-B
24″W x 18″D x 42″H



LP42PE-B
24″W x 18″D x 42″H



LP42LE-B
24″W x 18″D x 42″H



LP42CE-B
24″W x 18″D x 42″H

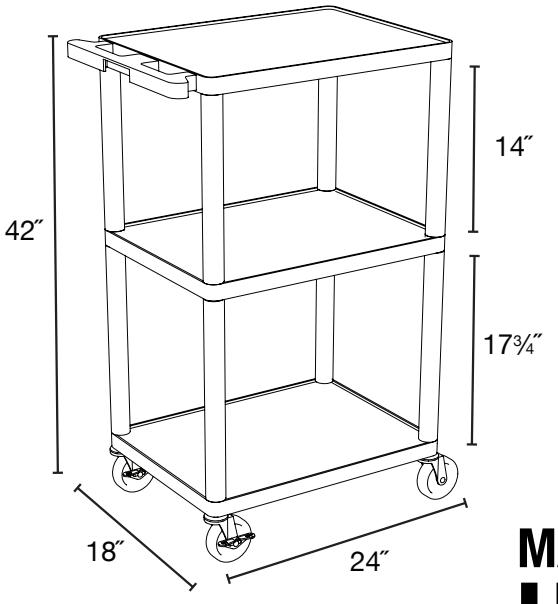

- Multipurpose utility cart perfect for use with audio/video equipment and more
- Measures 24″W x 18″D x 42″H
- .25″ retaining lip borders flat shelves to ensure minimal sliding
- Configurations for front pullout shelf, side pullout shelf and cabinet
- Ergonomic push handle molded into the top shelf for optimum comfort
- Four 4″ Heavy-Duty non-marring casters, two with locking brake, for mobility and stability
- Molded plastic shelves and legs won't stain, scratch, dent or rust
- Three-outlet surge surpressing 15″ cord and cord management system to keep cart clean and organized
- Maximum weight capacity of 400 lbs. (evenly distributed)

MADE IN USA

LIFETIME WARRANTY