# LUXOR | H.WILSON

# LP34-B

## *Heavy Duty A/V Cart*



***LP34E-B***

***24″W x 18″D x 34″H***



***LP34PE-B***



***LP34LE-B***

- 24”W x 18”D x 34”H
- .25″ retaining lip borders flat shelves to ensure ensure
- Configurations for front pullout shelf, side pullout shelf and cabinet
- Ergonomic push handle molded into the top shelf for optimum comfort
- Four 4″ Heavy-Duty non-marring casters, two with locking brake, for mobility and stability
- Molded plastic shelves and legs won’t stain, scratch, dent or rust
- Three-outlet surge surpressing 15″ cord and cord management system keep cart clean and organized
- Maximum weight capacity of 400 lbs. (evenly distributed)



***LP34C-B***

***24″W x 18″D x 34″H***

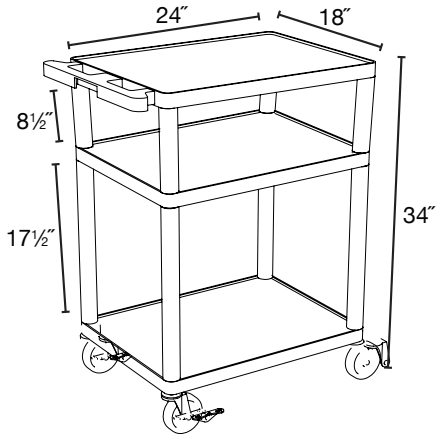


**MADE IN USA**

LIFETIME WARRANTY