EA Series



EA34E-B



EA34DE-B



EA34LE-B

- 32″W x 18″D flat shelves
- 33% More capacity than a standard 24″W x 18″D cart
- Has an ergonomic push handle molded into the top shelf
- Four 4″full swivel casters, two with locking brake
- Shelves and legs are constructed with an injection molded thermoplastic resin
- 300 lb. Weight capacity (evenly distributed)
- Available with drawer, pullout shelf and / or monitor mount
- Includes 3-outlet electric w/ 15 ft. cord

Measurements:

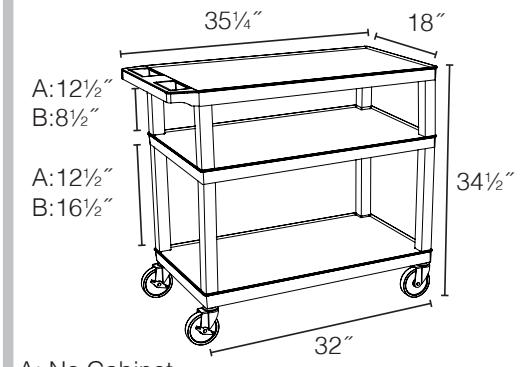

A: No Cabinet
B: Cabinet Included

NEW



EA34CLE-B



EA34CDE-B



EA34CE-B