26″ - 34″ H LP + LE Series



LP34LE-B | LEMFP
24″W x 18″D x 35½″H

LP34 Series:

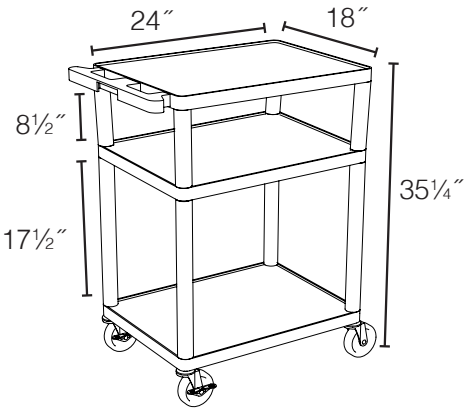

LP26 Series:

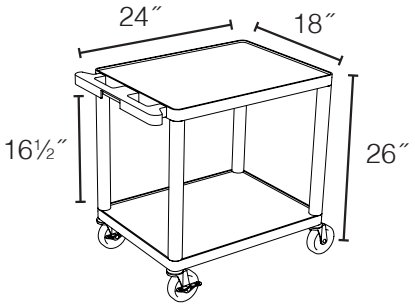

Also Available in LE Configuration which includes grip strips, wire clips, grommet hole and surge suppressing electric.

19 ⅝″W x 15 ⅝″D



LP34PE-B
24″W x 18″D x 35½″H



LP34E-B | LE34
24″W x 18″D x 35½″H



LP26E-B | LE26
24″W x 18″D x 26″H