42″ H LP + LE Series



LP42LE-B

LP42 Series:

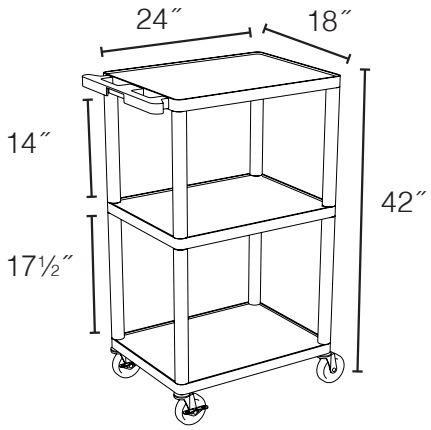

Also Available in LE Configuration which includes grip strips, wire clips, grommet hole and surge suppressing electric.



LP42LPE-B



LP42PE-B



LP42E-B | LE42



LPDUOE | LEDUO

24″W x 18″D x 16″-42″H
includes multiple sets of legs to make a 16″, 26″, 34″ or 42″ cart.