Presentation Stations

WPS4 Series



Shown with electrical assembly

WPS4CE
18¼″W x 34½″D x 40″H

- Four laminate work surfaces with a steel frame
- Second shelf can be set from 32″ up to 40″ high
- Locking wood laminate cabinet model inner dimensions are: 18¾″H x 13¾″W x 13¾″D
- Optional 3-outlet UL approved electrical assembly with 15 ft. cord
- A set of heavy duty 3″ full swivel furniture casters, two with locking brakes

Shelf Finish:	Gray
Steel Finish:	Black

Measurements:

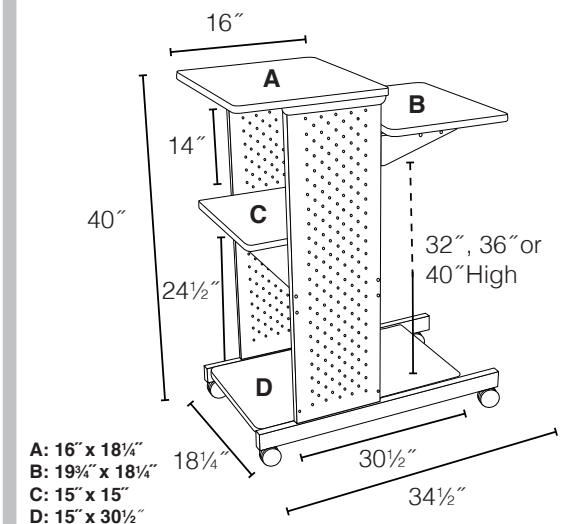

A: 16″ x 18¼″
B: 19¾″ x 18¼″
C: 15″ x 15″
D: 15″ x 30½″



Shown with electrical assembly

WPS4E
18¼″W x 34½″D x 40″H