PS4000 Series



Also available with Dark Walnut Panels

PS4000C-W

- Four laminate work surfaces with steel frame
- Second shelf from the top is adjustable in height to 33″, 37″ or 40¼″
- Available in dark gray or dark walnut
- 3″ Casters, two with locking brake
- PS4000C includes locking cabinet with interior dimensions of 13½″ W x 18⅜″ H

Shelf Finish: Dark Gray | Dark Walnut

PS4000C
18″W x 30″D x 40¼″H

PS4000 Measurements:

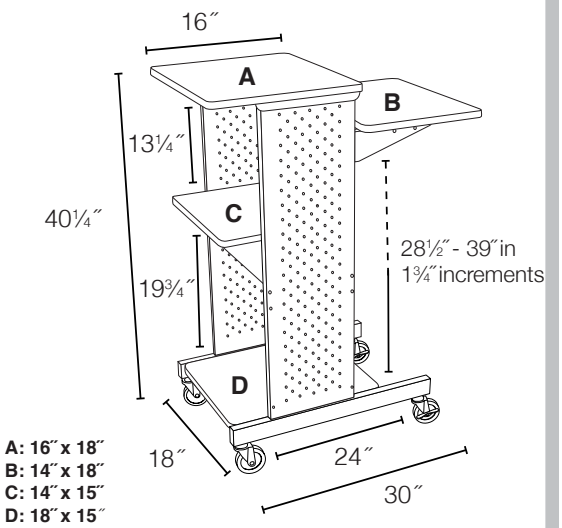

A: 16″ x 18″
B: 14″ x 18″
C: 14″ x 15″
D: 18″ x 15″



Also available with Dark Gray Panels

PS4000

PS4000-W
18″W x 30″D x 40¼″H