LUXOR | H.WILSON

06/05/14

Parts List

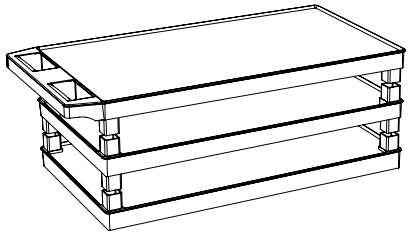

A x1
C x1
B x1

D x2

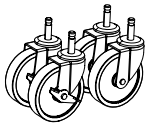

E x2

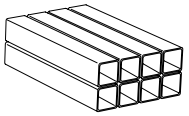

F x8

Tools Required

- Rubber Mallet

3 Flat Shelf 18 x 32 Cart Instructions

1

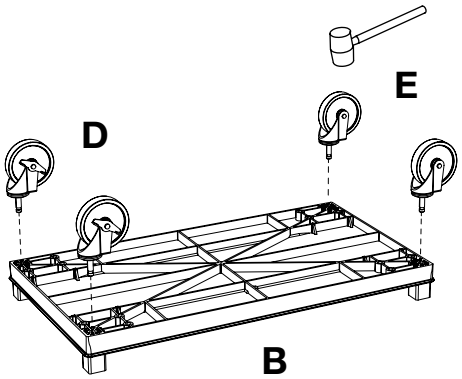

2

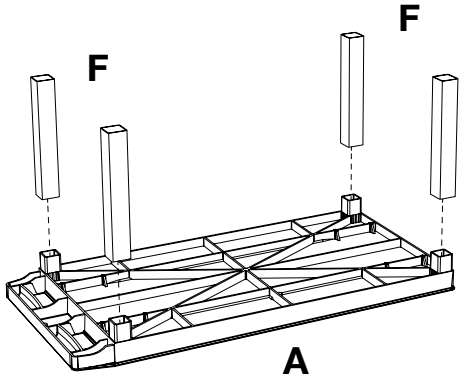

3

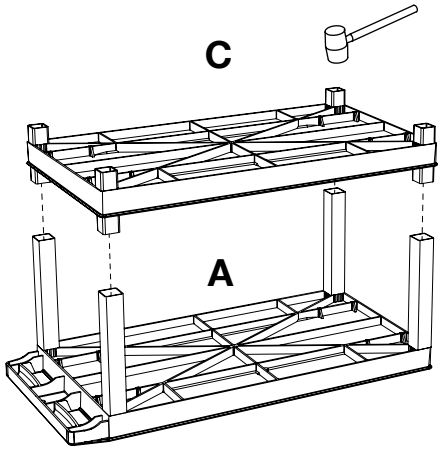

4

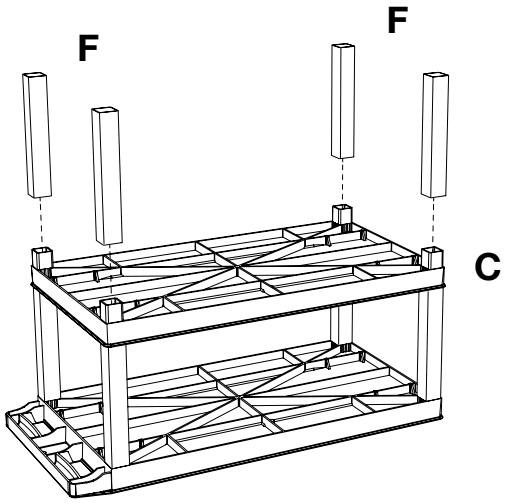

5

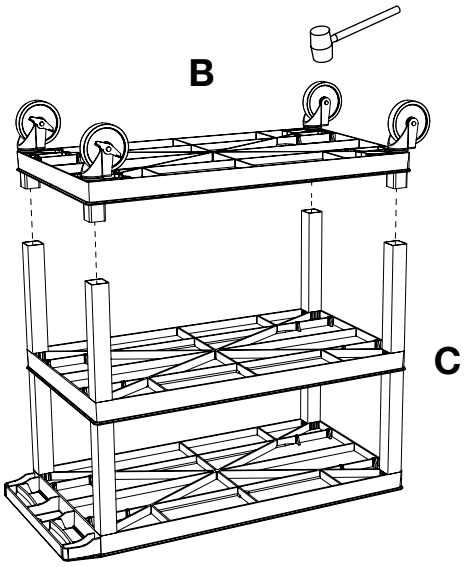

6



Electric Assembly Instructions

03/31/15

Number of outlets may vary.

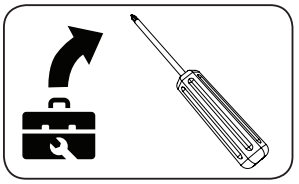

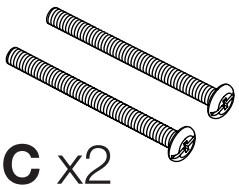

C x2



D x2



F x2

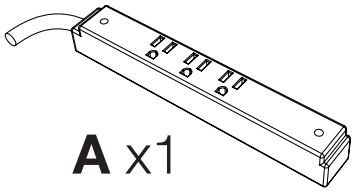

A x1

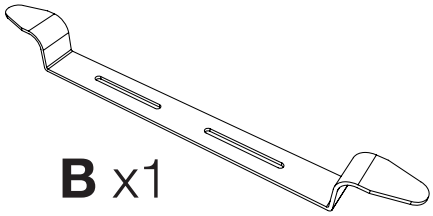

B x1

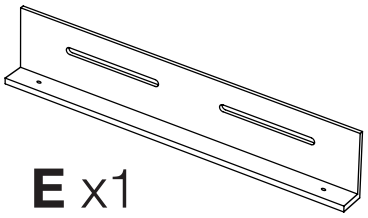

E x1

1

