Pullout Keyboard Shelf Instructions

for Plastic Carts

08/06/13

Parts List

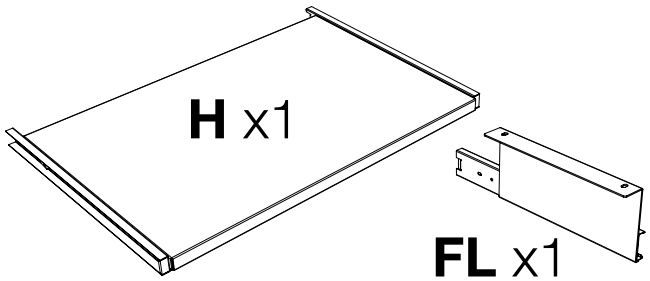

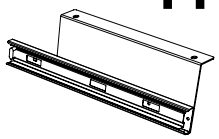

Tools Required

- Phillips Screwdriver



NOTICE:
Size and style of the plastic ribbed shelf may vary by model number.

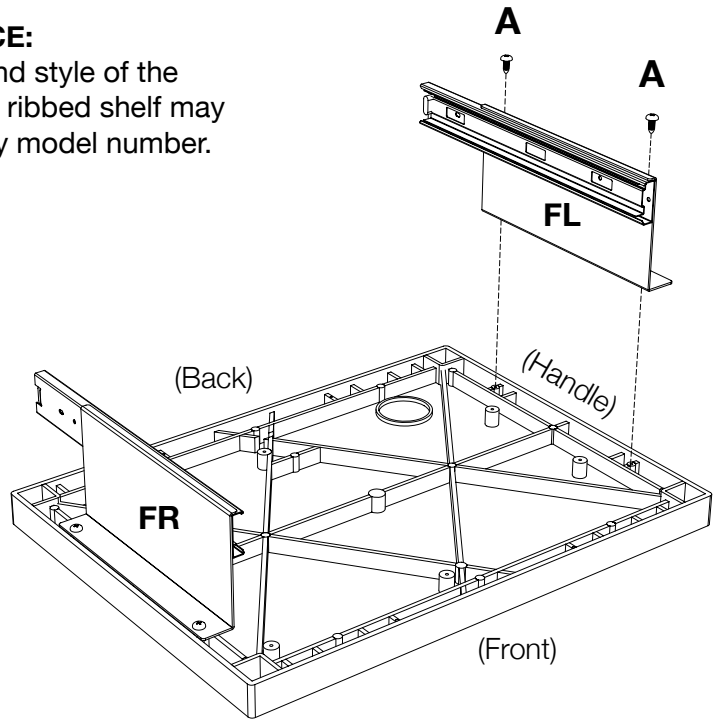

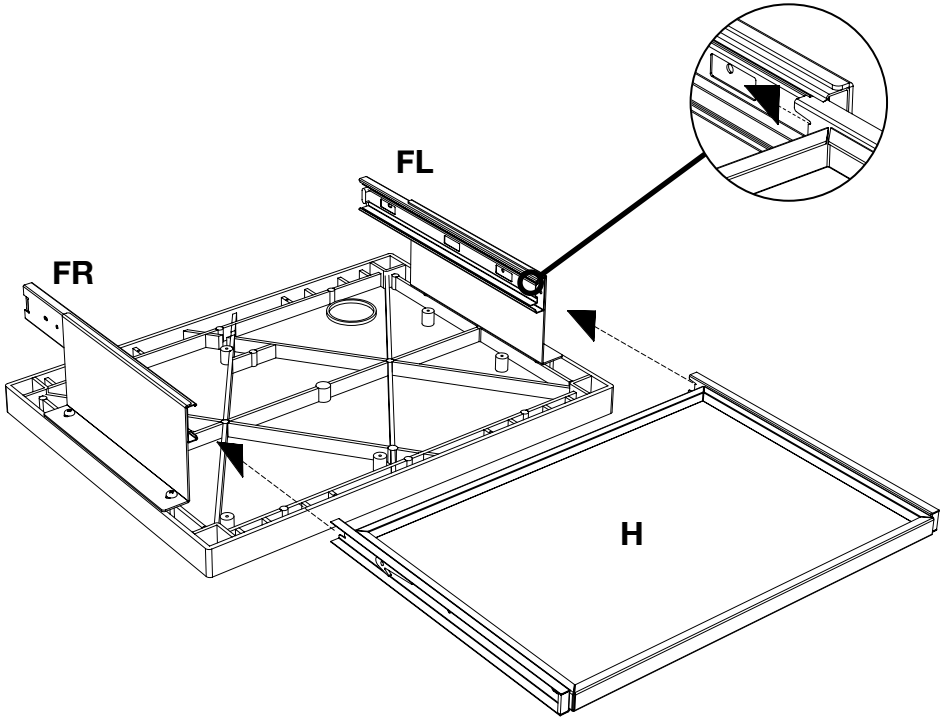

1

Take the top shelf of your plastic cart and lay it flat. Collect parts: **FL**, **FR** & **A**. Align **FR** & **FL** to the outer holes at the top of the shelf. Take screw **A** and fasten with a screwdriver, do not tighten fully until keyboard is attached.

2

Collect parts: **H**. Align the pullout shelf **H** runner so that the runner snaps into place into the **FL** & **FR** brackets. Pull the shelf out to make sure it is fully seated. Tighten screws **A**. Pullout keyboard shelf assembly is now complete.

Electric Assembly Instructions

03/31/15

Number of outlets may vary.

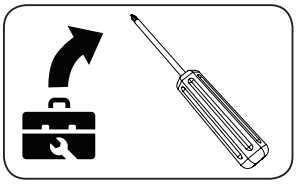

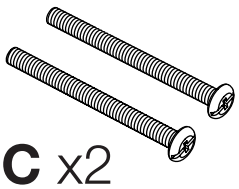

C x2



D x2



F x2

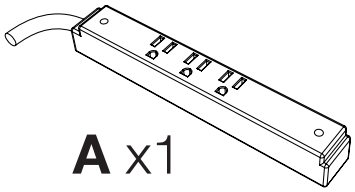

A x1

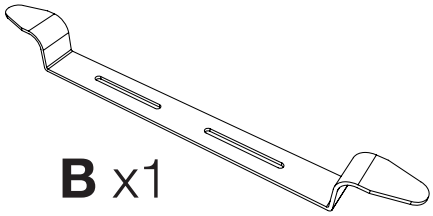

B x1

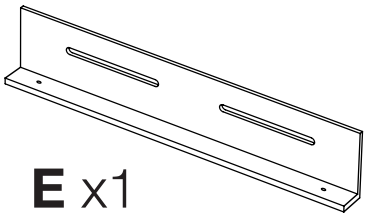

E x1

1

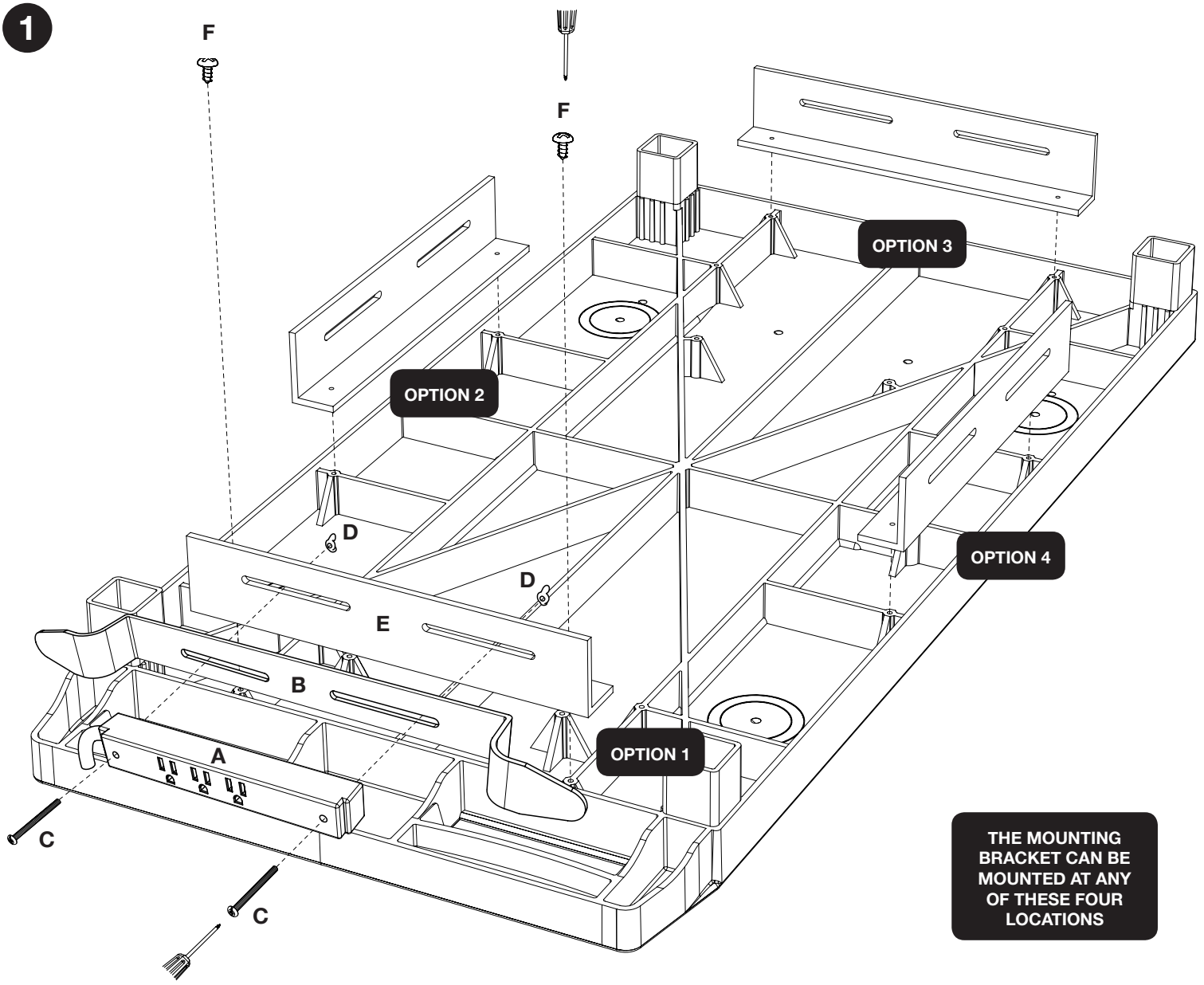

3 Flat Shelf 18 x 32 Cart w/ Cabinet Instructions

04/01/15

Parts List

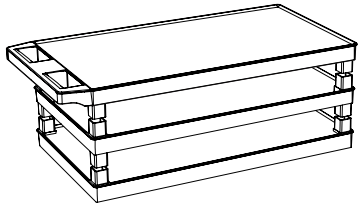

A x1
C x1
B x1

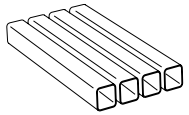

D x4

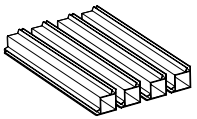

E x4



F x2 **G** x2

Tools Required

- Rubber Mallet
- Phillips Screwdriver



K x2

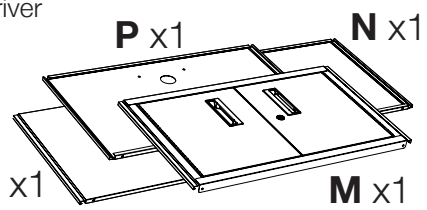

1

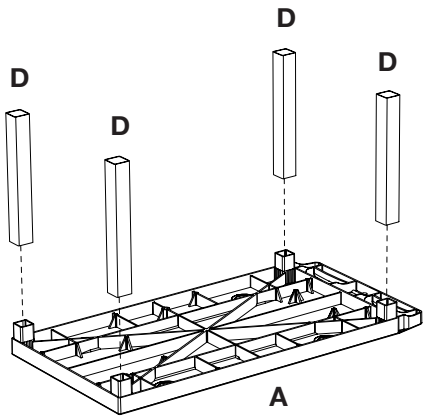

2

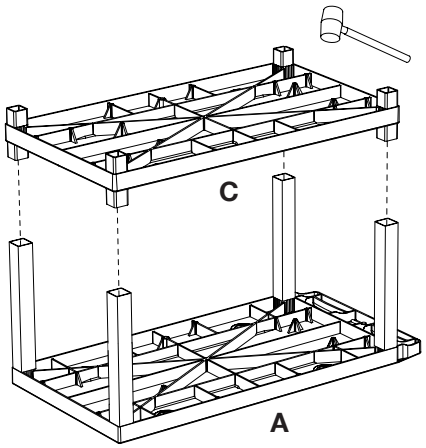

3

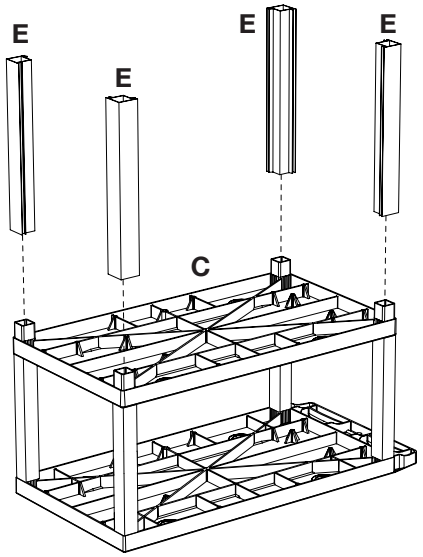

4

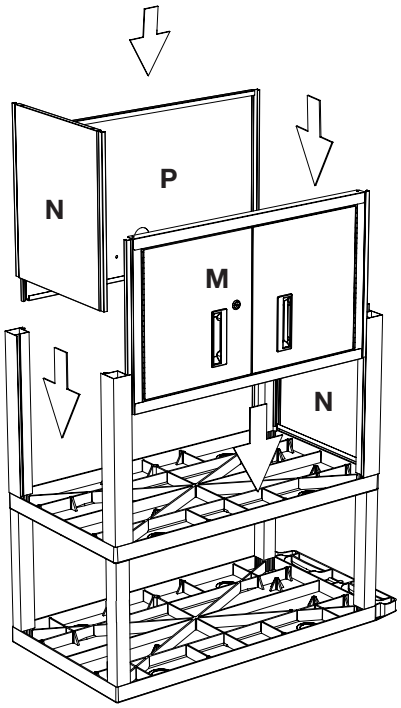

5

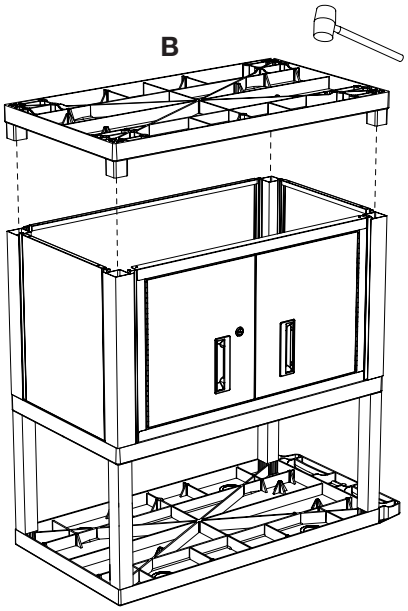

6

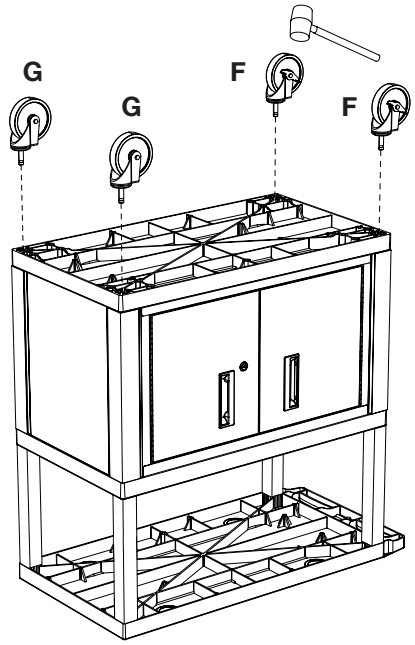

7

