



1

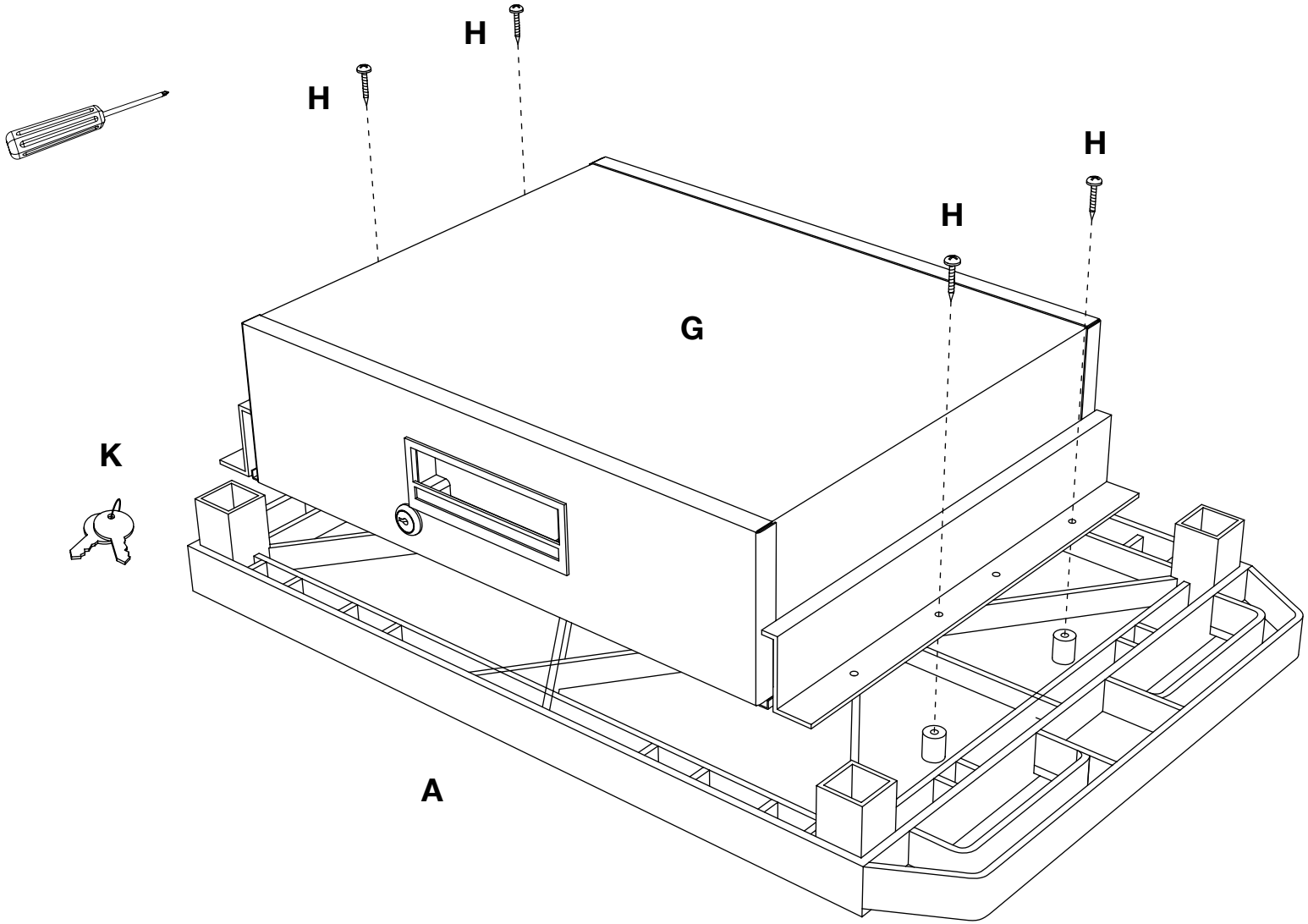

Electric Assembly Instructions

03/31/15

Number of outlets may vary.

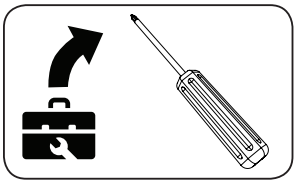

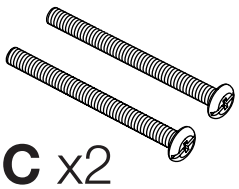

C x2



D x2



F x2

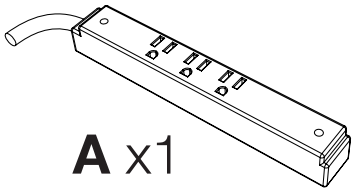

A x1

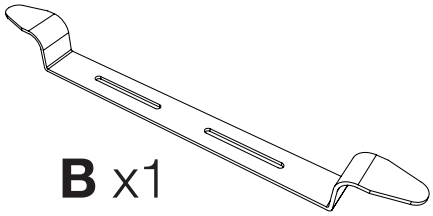

B x1

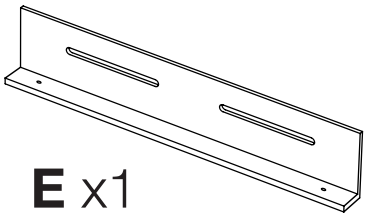

E x1

1

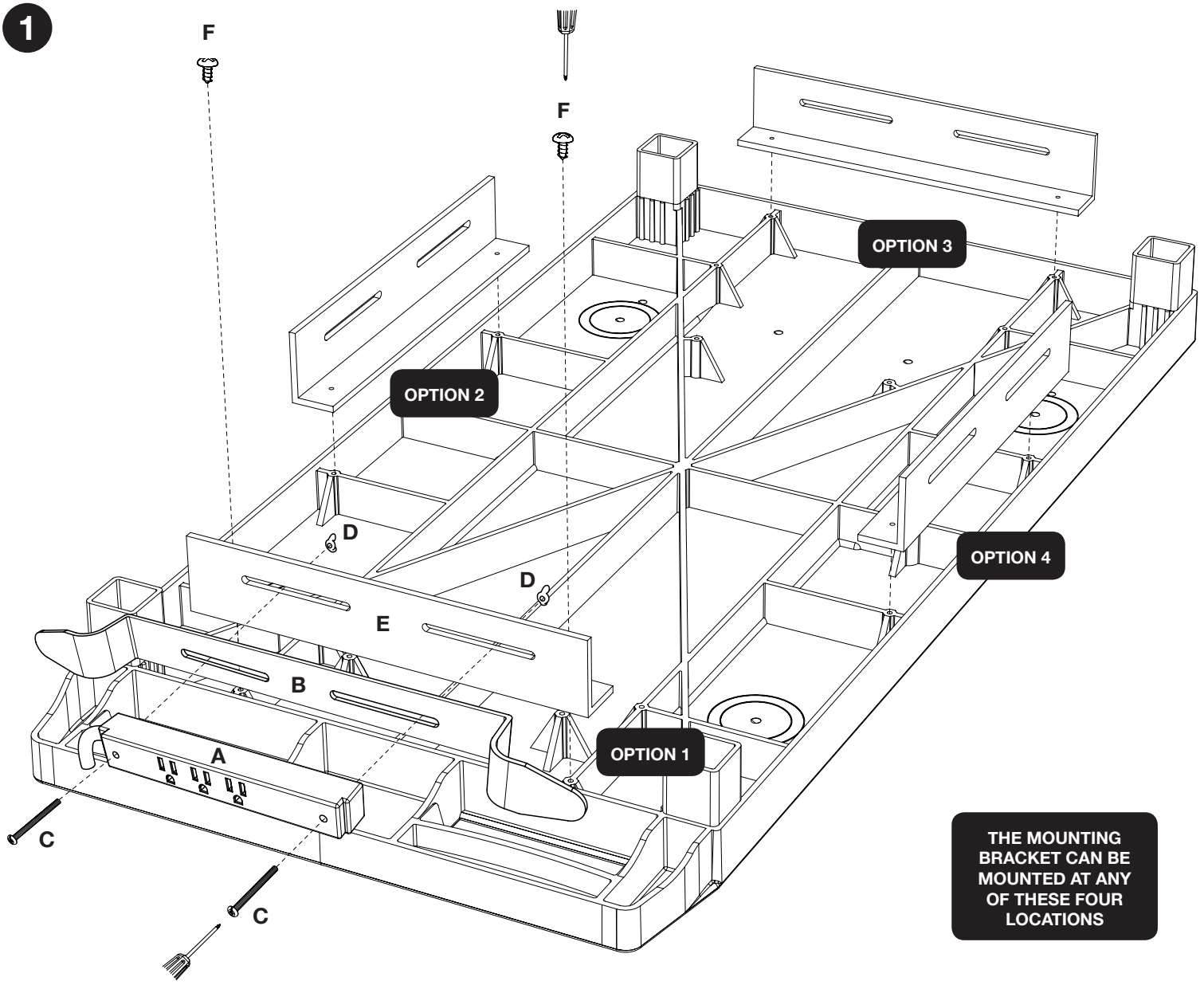

3 Flat Shelf 18 x 32 Cart w/ Cabinet Instructions

04/01/15

Parts List

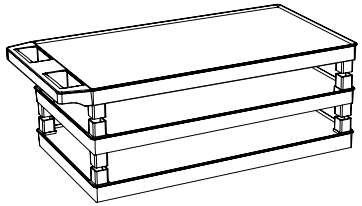

A x1
C x1
B x1

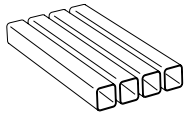

D x4

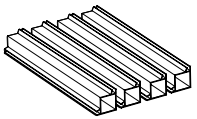

E x4



F x2 **G** x2

Tools Required

- Rubber Mallet
- Phillips Screwdriver



K x2

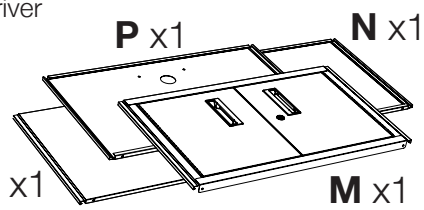

1

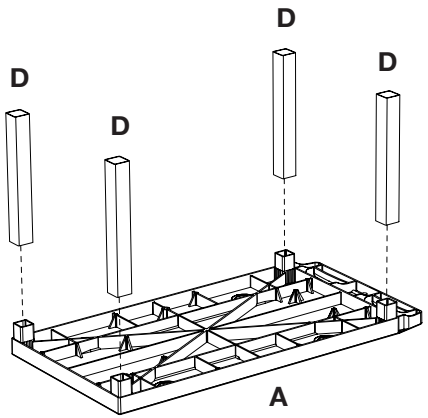

2

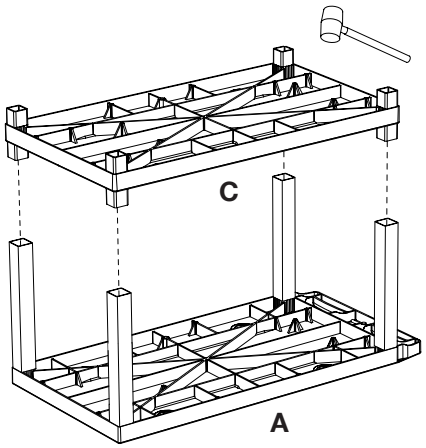

3

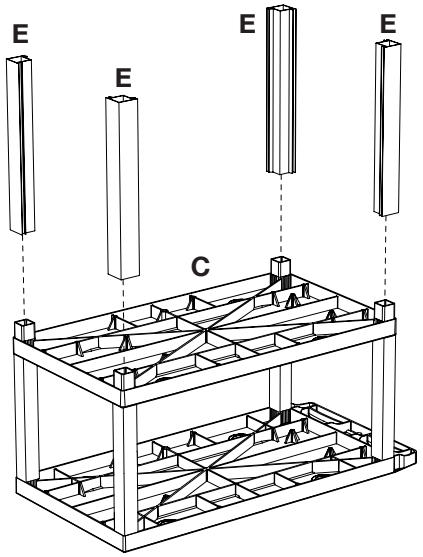

4

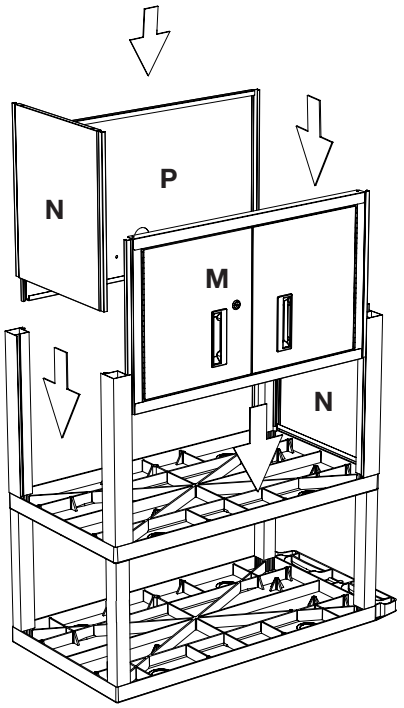

5

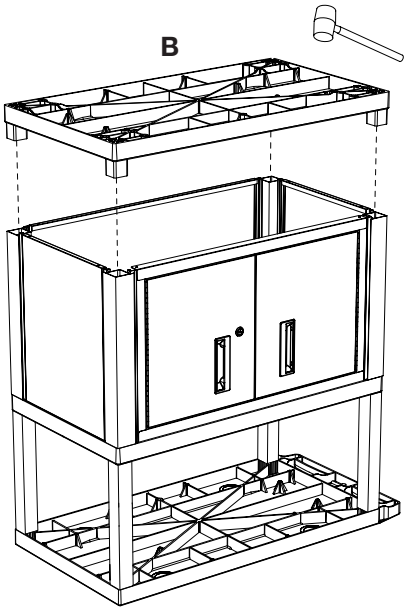

6

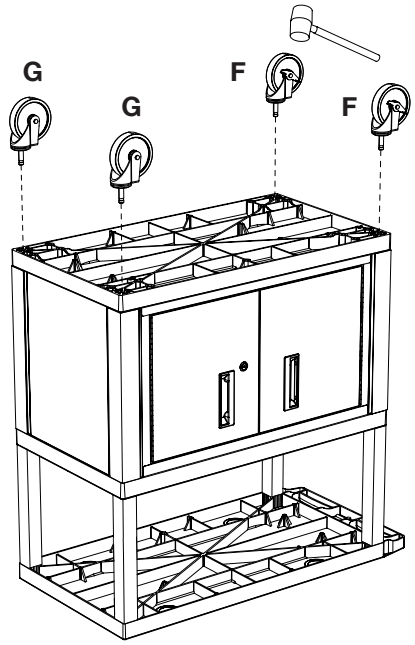

7

