Instruction Sheet

Models All BC, BCB Carts



BC55



BC60

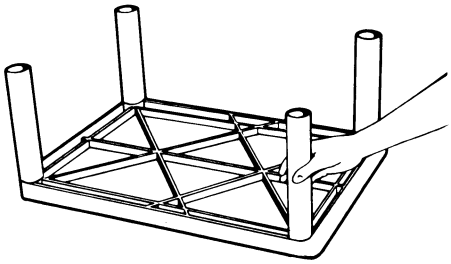

1

Lay top shelf (with 4 leg posts only), ribbed side up on a smooth surface. Begin cart assembly by pushing 1 set of 4 legs onto leg posts.

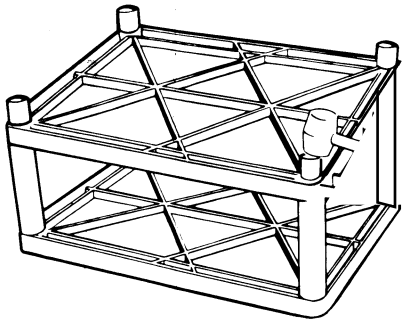

2

Position second shelf over the 4 legs and insert leg posts into legs. Using a rubber mallet, firmly hammer shelf into legs until all four legs are seated (flush) against the surfaces of both shelves.

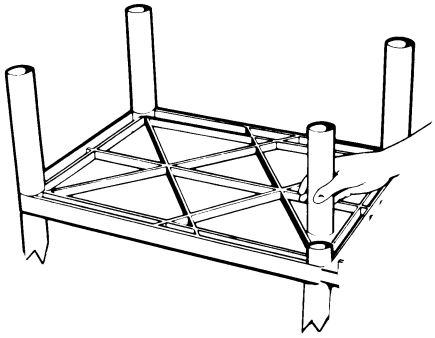

3

Place the next set of legs onto leg posts of shelf with handle and firmly hammer until properly seated. Repeat for all middle shelves.

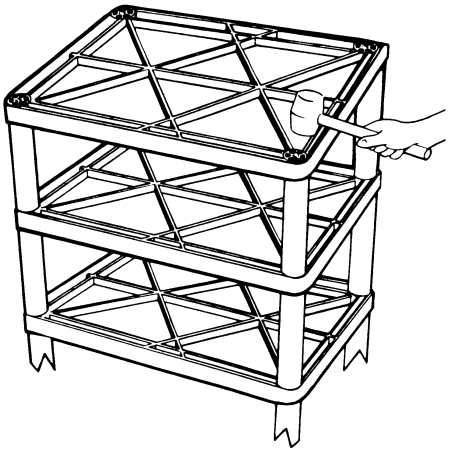

5

Add bottom shelf with caster sockets.

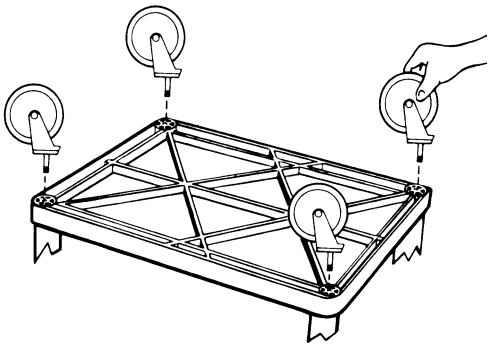

6

Push the four casters firmly into the holes in each corner of the bottom shelf (for big wheel models insert two 4” casters on narrow end of cart and follow big wheel instructions on next page).. Important: casters must be fully seated. Tap firmly with rubber mallet to properly seat casters. Turn your Endura Linen Cart right side up, it is now ready for use.

1. Turn the table upside down. If 4" casters are already installed, these should be removed. The big wheel is to be installed along the most narrow side of the table. (See illus. #A.) Install axle brackets as illustrated.
2. Tap one axle cap onto one end of the axle and slide the big wheel onto the axle from the opposite end.
3. Install axle by sliding it through axle brackets so that big wheel is resting against side of bracket. (See illus. #A.)
4. Tap remaining axle cap onto axle end. (See illus #B.) The big wheels should be a snug fit with little side-to side play. If fitting is too tight, the axle is too short; if too loose, the axle is too long. A proper fit is an important safety consideration. Contact your Luxor dealer if you require further assistance. You may fax Luxor toll free.

IMPORTANT:
The following instructions apply to the big wheel kit when purchased as a big wheel accessory. **The axle should protrude only 1/4" beyond the wheel. If it is longer, mark the axle at 1/4" and cut off the remaining end with a hacksaw. Taper the cut off end with a file to more easily affix the remaining axle cap.**

5. Two 4" casters should be installed now. These should be locking casters.

Your Universal Big Wheel Assembly is now ready for use. It will make your table safer and more stable. Additional safety accessories are available. Write "Safer Tables," Luxor Corporation, 2245 Delany Road, Waukegan, IL 60087.

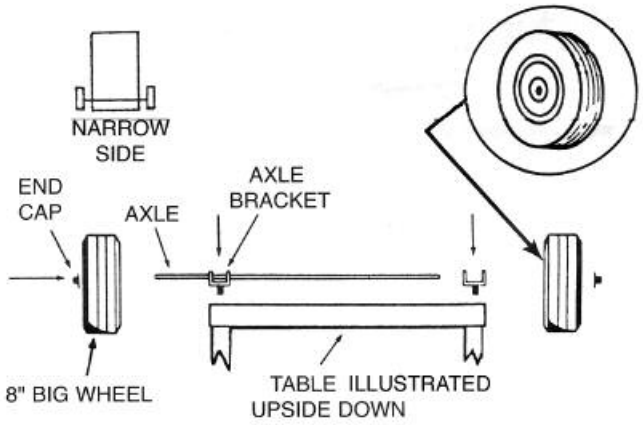

ILLUSTRATION #A

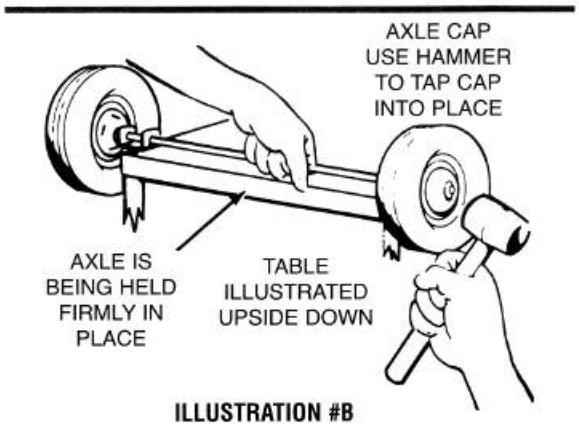

ILLUSTRATION #B