LUXOR | H.WILSON

BC55

Structural Foam Plastic Cart



BC55-B

32″W x 24″D x 48″H

Black Gray

- Multipurpose lightweight utility cart ideal for use as serving or storage cart and more
- Measures 32″W x 24″D x 48″H with a clearance between shelves of 7¾″ for easy access
- Includes five 1.75″ high flat shelves with .25″ retaining lip to secure items from sliding off
- Four 4″ Heavy-Duty non-marring casters, two with locking brake
- Molded plastic shelves and legs won't stain, scratch, dent or rust
- Maximum weight capacity of 300lbs (evenly distributed)

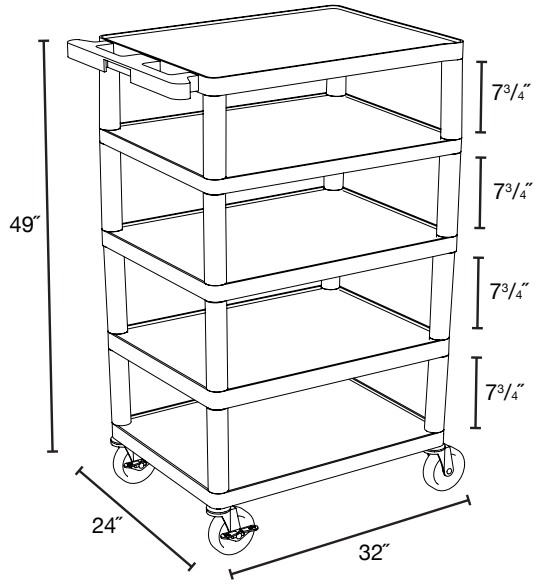

LIFETIME WARRANTY

MADE IN USA