LUXOR | H.WILSON

BC50

Structural Foam Plastic Cart



BC50-B

24″W x 18″D x 46″H

Red Blue Gray Putty Black

- Multipurpose lightweight utility cart ideal for use as serving or storage cart and more
- Measures 24″W x 18″D x 46″H with a clearance between shelves of 8½″ for easy access
- Includes five high flat shelves with .25″ retaining lip to secure items from sliding off
- Four 4″ Heavy-Duty non-marring casters, two with locking brake
- Molded plastic shelves and legs won't stain, scratch, dent or rust
- Maximum weight capacity of 300lbs (evenly distributed)

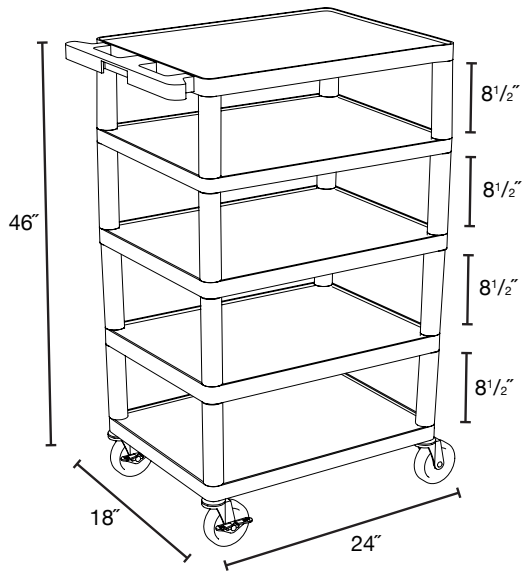

LIFETIME WARRANTY

MADE IN USA