LUXOR | H.WILSON

BC45

Structural Foam Plastic Cart



- Measures 24″W x 18″D x 39″H with a clearance between shelves of 8½″
- Includes four flat shelves with .25″ retaining lip to secure items from sliding off
- Ergonomic push handle molded into the top shelf for optimum comfort
- Four 4″ Heavy-Duty non-marring casters, two with locking brake
- Molded plastic shelves and legs won't stain, scratch, dent or rust
- Maximum weight capacity of 300lbs (evenly distributed)

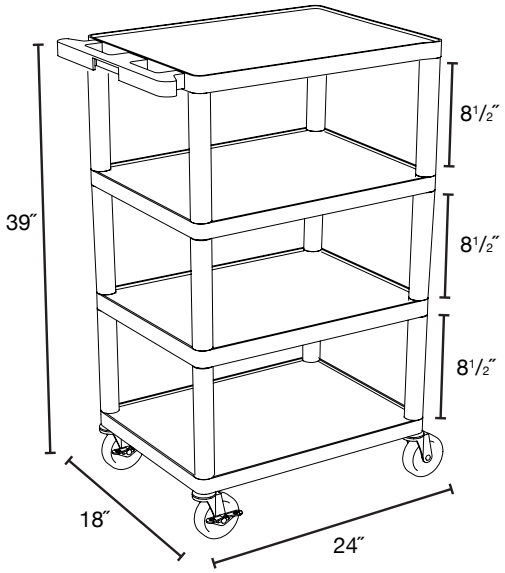

LIFETIME WARRANTY

MADE IN USA