Instruction Sheet

Models All BC, BCB Carts

LUXOR

Customer Service Dept.
LUXOR
2245 Delany Road
Waukegan, IL 60087



BC55



BC60

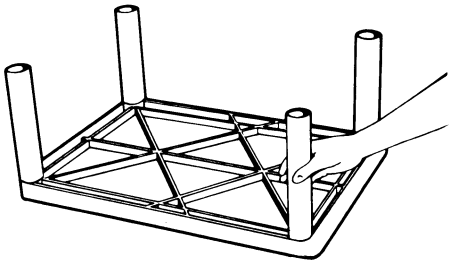

1
Lay top shelf (with 4 leg posts only), ribbed side up on a smooth surface. Begin cart assembly by pushing 1 set of 4 legs onto leg posts.

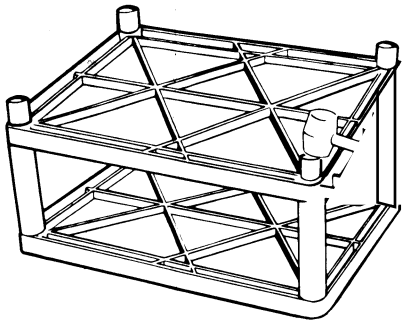

2
Position second shelf over the 4 legs and insert leg posts into legs. Using a rubber mallet, firmly hammer shelf into legs until all four legs are seated (flush) against the surfaces of both shelves.

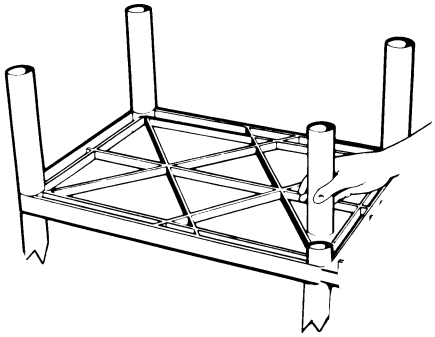

3
Place the next set of legs onto leg posts of shelf with handle and firmly hammer until properly seated. Repeat for all middle shelves.

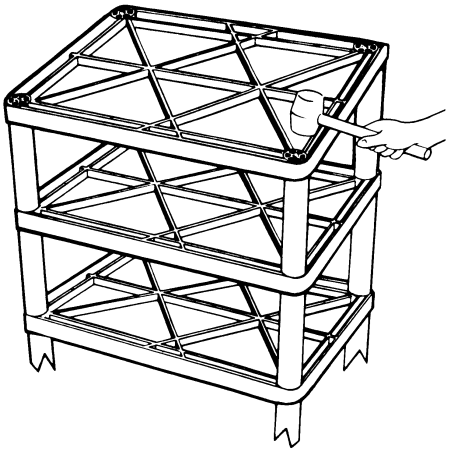

5
Add bottom shelf with caster sockets.

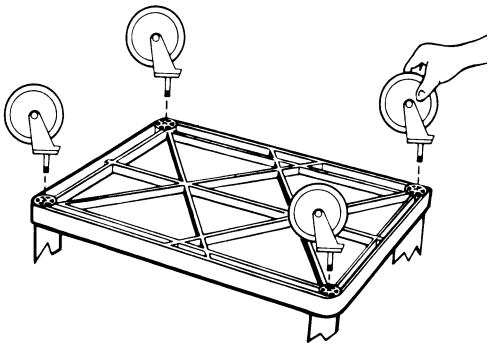

6
Push the four casters firmly into the holes in each corner of the bottom shelf (for big wheel models insert two 4” casters on narrow end of cart and follow big wheel instructions on next page).. Important: casters must be fully seated. Tap firmly with rubber mallet to properly seat casters. Turn your Endura Linen Cart right side up, it is now ready for use.