LUXOR | H.WILSON

BC40

Structural Foam Plastic Cart



BC40

32″W x 24″D x 37¾″H

Black Gray

- Measures 32″W x 24″D x 37¾″H (width includes handle) with a clearance between shelves of 7¾″ for easy access
- Includes four 1¾″ high flat shelves with .25″ retaining lip to secure items from sliding off
- Ergonomic push handle molded into the top shelf for optimum comfort
- Four 4″ Heavy-Duty non-marring casters, two with locking brake
- Molded plastic shelves and legs won't stain, scratch, dent or rust
- Maximum weight capacity of 300lbs (evenly distributed)

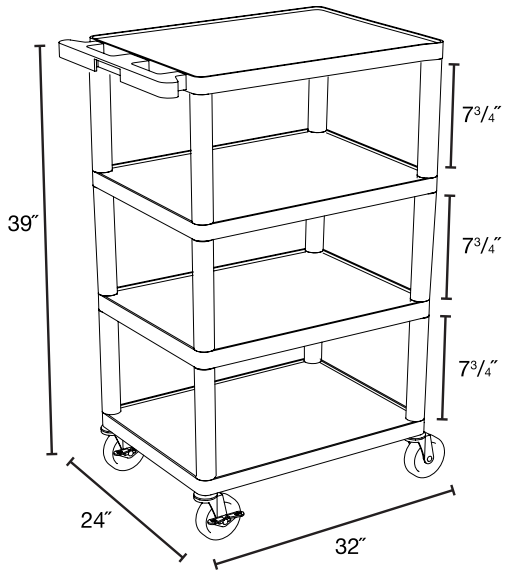

LIFETIME WARRANTY

MADE IN USA