LUXOR | H.WILSON

AVJ42KBDL

Adjustable Height Steel A/V Cart



AVJ42KBDL-RD

24″W x 18″D x 42″H

Red Blue Black

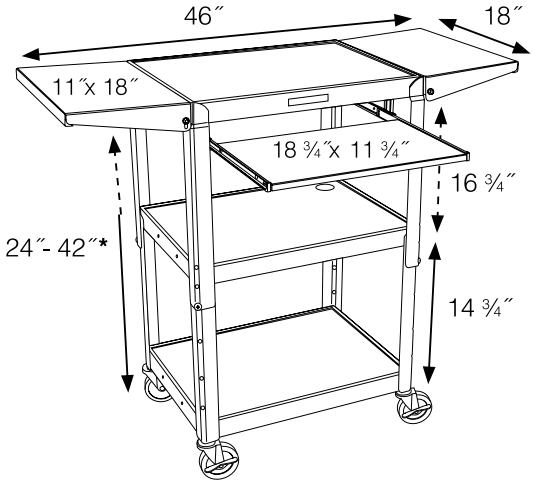

* - in 2″ increments

- Multipurpose steel utility cart perfect for use with audio/video equipment and more
- Roll formed shelves with powder coat paint finish
- Tables are robotically-welded for stability, with easy-access cable holes to keep the cart clean, organized and safe
- Measures 24″W x 18″D x 42″H with adjustable height from 24″ to 42″ in 2″ increments
- Drop leaf side shelves measure 11¾″W x 18¾″D
- Keyboard shelf measures 18″W x 11″D
- .25″ retaining lip borders flat shelves
- Rolling cart with four 4″ silent roll, full swivel ball bearing casters, two with locking brake
- Three-outlet, 15’ UL and CSA listed electrical assembly with cord plug snap

MADE IN USA