LUXOR | H.WILSON

Pullout Keyboard Shelf Instructions

for Metal Carts

08/01/13

Parts List

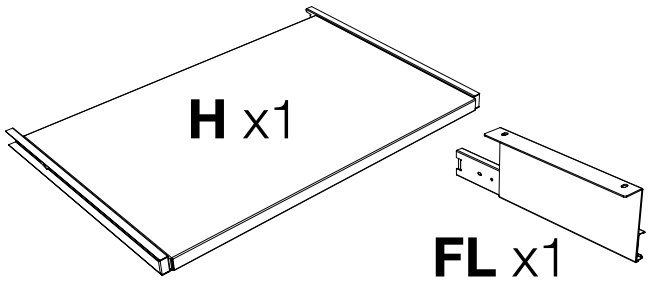

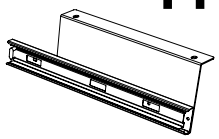

Tools Required

- Phillips Screwdriver
- Pliers or Adjustable Wrench

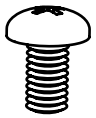

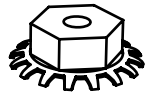

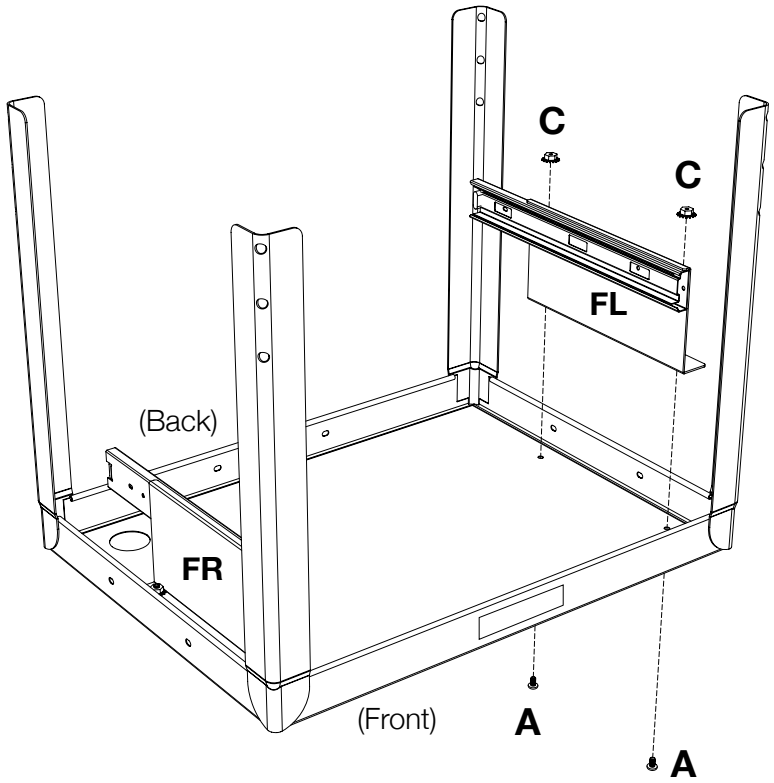

1

Take the top shelf of your metal cart and lay it flat. Collect parts: **FL**, **FR**, **A** & **C**. Push Screw **A** through the hole at the top of the shelf. Lay bracket **FL** & **FR** on top of screw **A**. Take nut **C** and fasten with a screwdriver and pliers, do not tighten fully until shelf is attached.

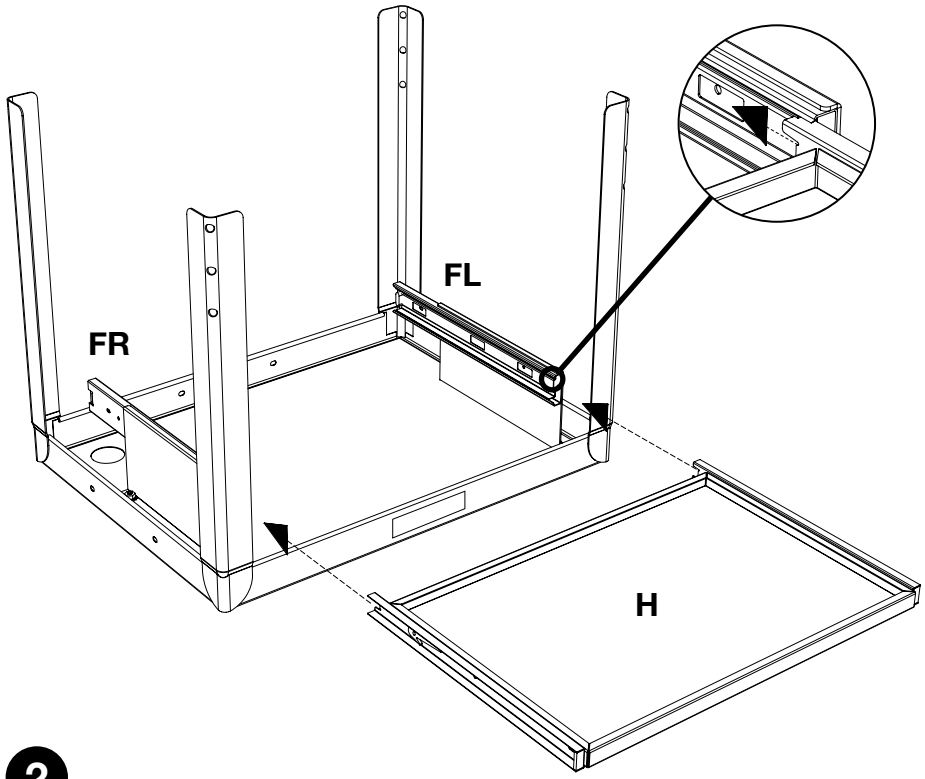

2

Collect parts: **H**. Align the pullout shelf **H** runner so that the runner snaps into place into the **FL** & **FR** brackets. Pull the shelf out to make sure it is fully seated. Tighten screws **A** and nut **C**. Pullout keyboard shelf assembly is now complete.

01/31/13

LUXOR | H.WILSON

www.luxorfurn.com
www.hwilson.com

Drop Leaf Instructions

AVJ42DL, W42ADL

Parts List

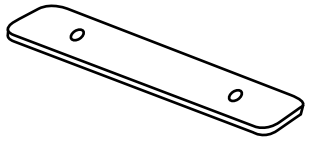

A x4

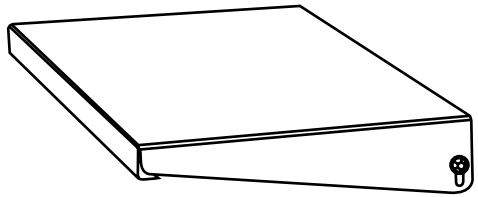

B x2

Tools Required

- Phillips Screwdriver
- Pliers or Adjustable Wrench

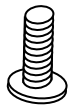

C x4



D x4

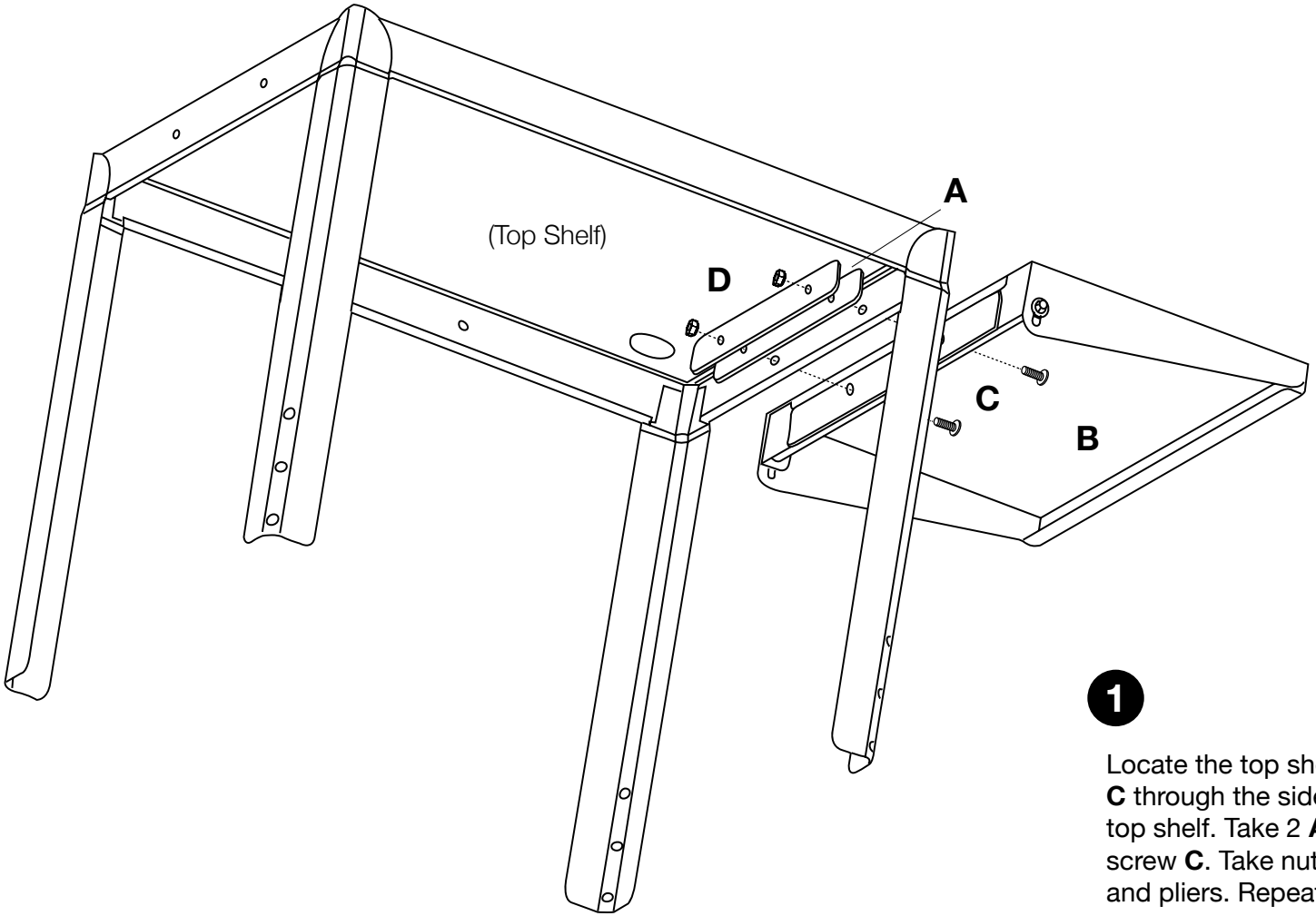

1

Locate the top shelf of your metal cart. Push screw **C** through the side holes of drop shelf **B** and the top shelf. Take 2 **A** brackets and push them through screw **C**. Take nut **D** and fasten with a screwdriver and pliers. Repeat this on the other side.

01/31/13

LUXOR | H.WILSON

www.luxorfurn.com
www.hwilson.com

Adjustable Height Metal Cart Instructions

AVJ42, W42A

Parts List

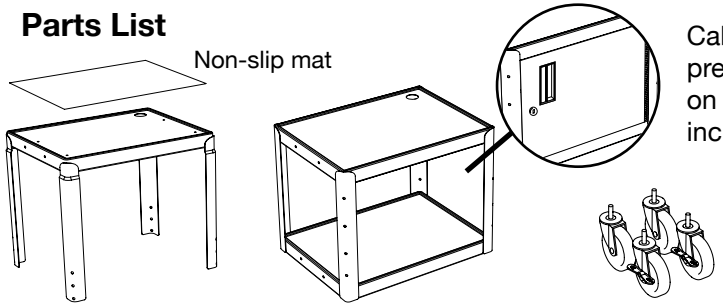

A x1 **B** x1 **C** x4

Cabinet comes pre-assembled on units that include a cabinet.

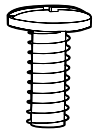

D x4



E x4

Tools Required

- Phillips Screwdriver
- Rubber Mallet
- Pliers or Adjustable Wrench

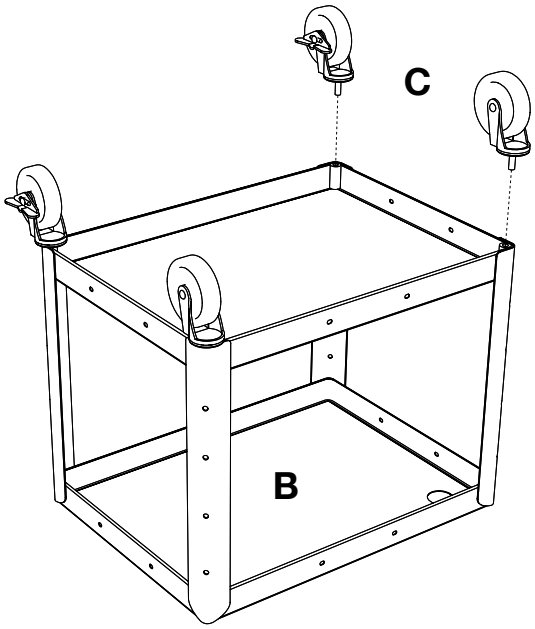

1

Position the bottom shelf **B** so that the caster holes are facing up. Insert caster **C** into the caster holes on the bottom of shelf **B**. Use a mallet to set the casters properly.

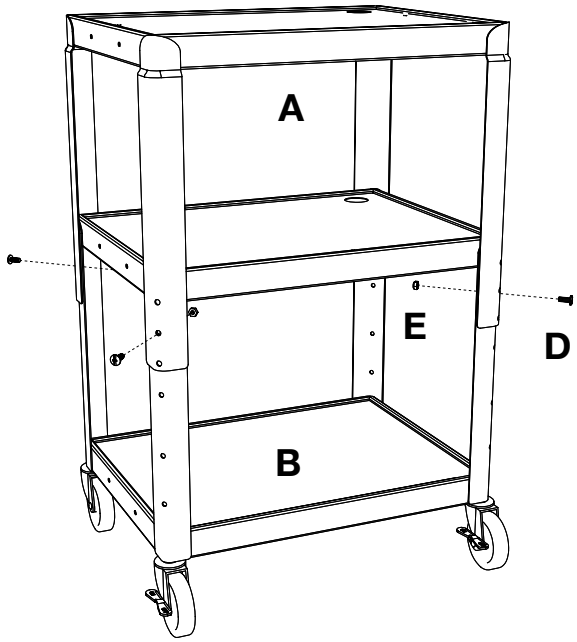

2

Flip bottom shelf **B** so that it is on its side. Set top shelf **A** so that it overlaps bottom shelf **B**. Align the screw holes so that the top shelf **A** is at the desired height.

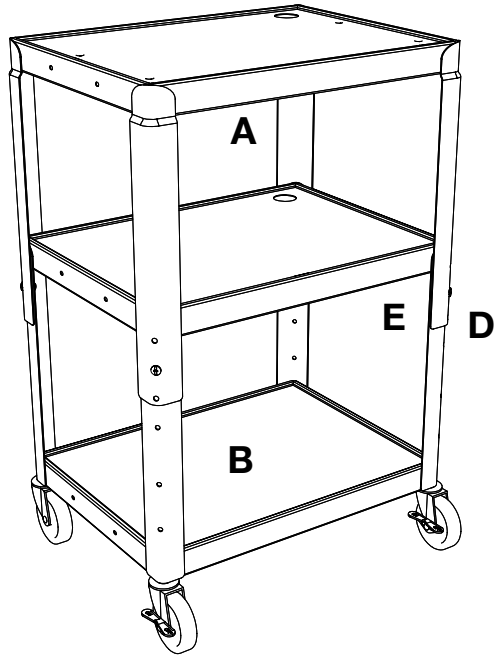

3

Insert screw **D** through the aligned screw hole of **A** and **B** and fasten nut **E** with pliers and screwdriver. Place Non-slip mat on desired shelf. The cart is now complete.

LUXOR | H.WILSON

www.luxorfurn.com
www.hwilson.com

Electric Assembly Instructions

Number of outlets may vary.

Parts List

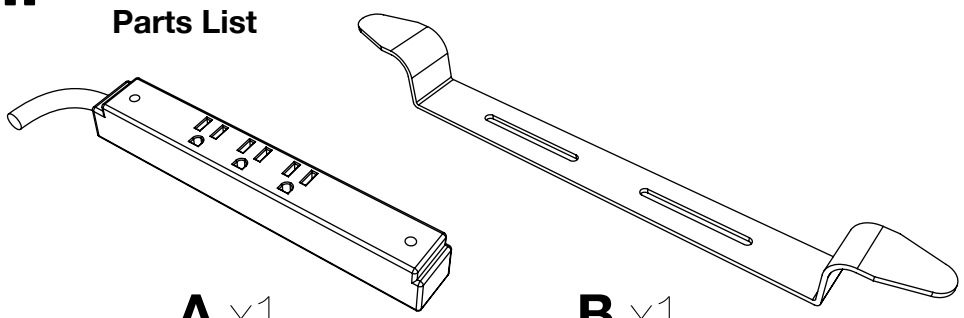

A x1 **B** x1

Tools Required

- Screwdriver

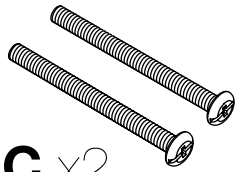

C x2



D x2

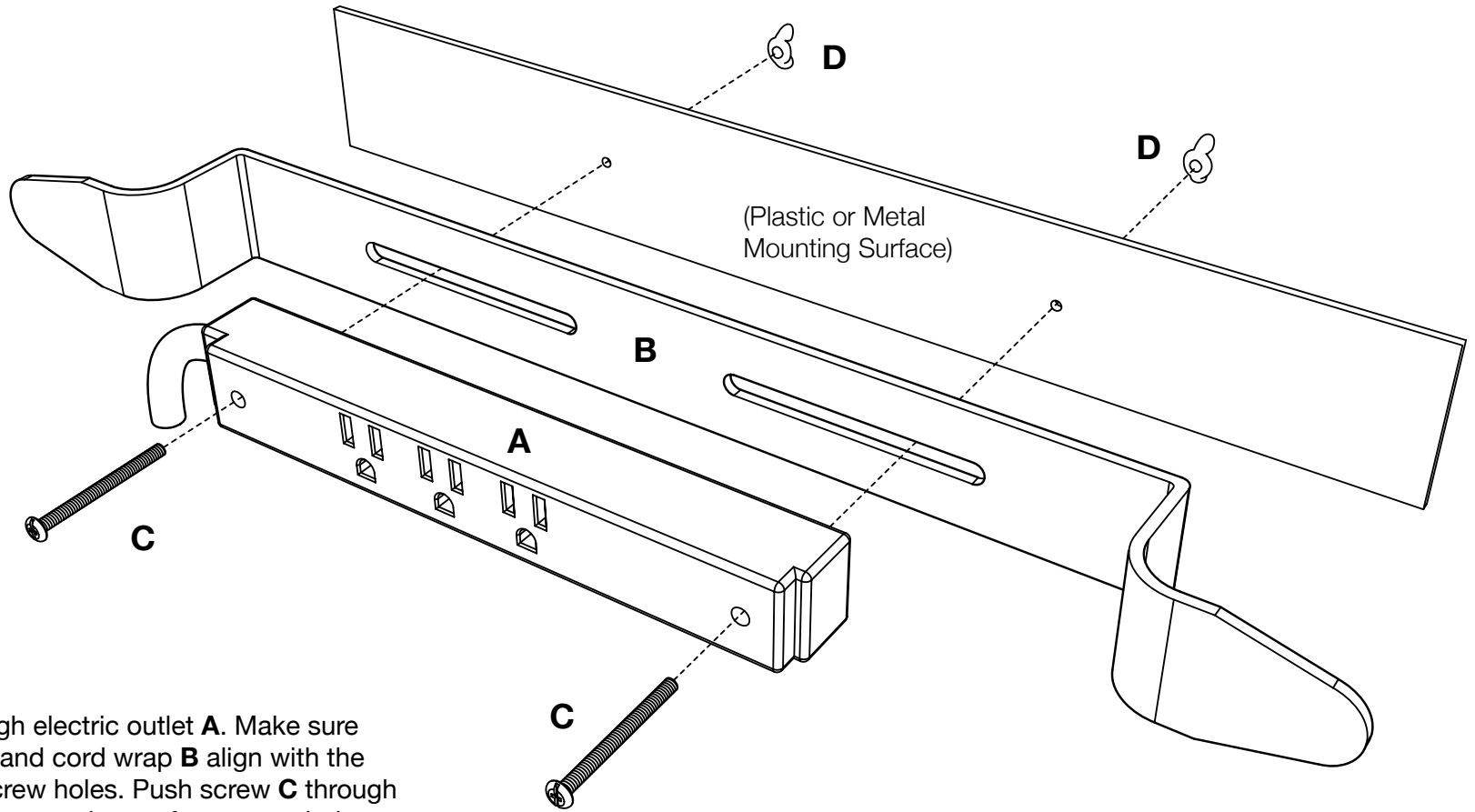

1

Push screw **C** through electric outlet **A**. Make sure the electric outlet **A** and cord wrap **B** align with the mounting surface screw holes. Push screw **C** through cord wrap **B** and the mounting surface screw holes. Use wing nut **D** and screwdriver to fasten.