LUXOR | H.WILSON

AVJ42KB

Adjustable Height Metal Cart w/ Keyboard



AVJ42KB
W42AEKB

- Steel shelves have a ¼″ retaining lip, with cable access holes
- No slip rubber mat for adjustable top shelf
- Pullout keyboard shelf which is ideal for chromebook & keyboards
- A set of silent roll, 4″ full swivel ball bearing casters, two with locking brakes
- Includes a 3-outlet UL listed electrical assembly with a 15 ft. cord

LIFETIME WARRANTY

MADE IN USA

Available in 8 Colors:



Color Options:	Black	Gray -LG	Putty -OW	Red -RD	Blue -RB	Yellow -YW	Green -GN	Navy -Z

To specify which unit color is ordered, replace ★ in this example product number with available color option of choice: **AVJ42KB★**

Measurements:

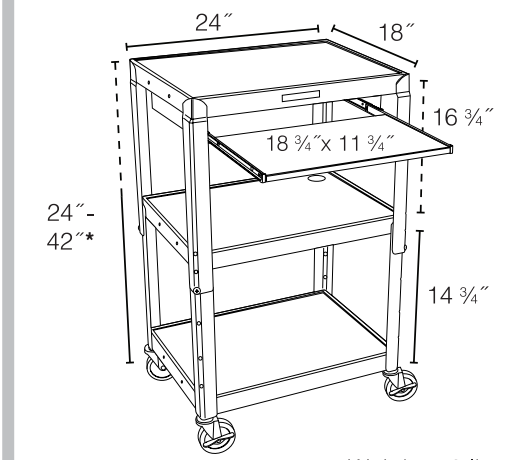

* - in 2″increments

Weight: 50 lbs.