INSTALLATION DETAILS

- Recommended crew (Adult)**: 2**
- Installation time**: 5 hours + concrete and ground prep**
- User age**: 2-5**
- Use zone**: 32 X 31**
- Weight**: 1,455 lbs**

SURFACING: Use of safety surfacing in compliance with ASTM specification F1292 is required.

MAINTENANCE:

- As the owner of the playground you are responsible for maintenance of the equipment and play area. A maintenance schedule must be developed and the equipment inspected frequently.
- Be sure to inspect surfacing for foreign objects that could cause injury and that sufficient surfacing is in place in accordance with ASTM and CPSC standards.



NOTE: Keep a copy of these instructions on file to assist you with maintenance and replacement parts.



PART NUMBER/DESCRIPTION	IMAGE	QTY
YP.EX.99.01.01 PLATFORM	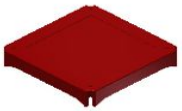	4
YP.EX.99.06.01 SLIDE	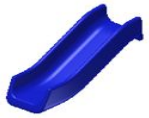	2
H.02.03.037 BLACK COVER		2
YP.EX.99.04.01 POST COVER		20
H.02.04.009 BOLT COVER	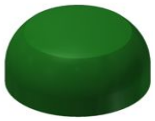	90
YP.EX.99.12.01 STEP	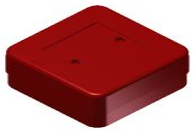	1
H.02.04.010 BOLT COVER RADIUS	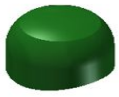	10

PART NUMBER/DESCRIPTION	IMAGE	QTY
YP.EX.99.09.01 JEEP WINDOW		1
YP.EX.99.07.01 ROOF		1
H.02.04.047 CLAMP		16
H.02.04.083 FLANGE	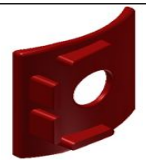	16
YL.EX.99.11.01 DINO CLIMB		1
YY.EX.01.01.01 EXPLORER ABACUS WALL		1

PART NUMBER/DESCRIPTION	IMAGE	QTY
YY.EX.01.02.01 EXPLORER LABYRINTH WALL	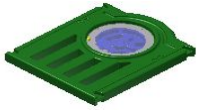	1
	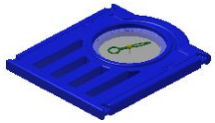	
YY.EX.01.04.01 EXPLORER JUMPING BALLS WALL		1
YY.EX.01.01.01 EXPLORER JEEP BODY		1
YL.EX.99.07.01 PLATFORM CONNETION PART		16

PART NUMBER/DESCRIPTION	IMAGE	QTY
YL.EX.99.01.01.001 POST 280 CM		1
YL.EX.99.01.01.002 POST 280 CM		1
YL.EX.99.01.01.003 POST 280 CM		1
YL.EX.99.01.01.004 POST 280 CM		1
YL.EX.99.02.01.001 POST 200 CM		1
YL.EX.99.02.01.002 POST 200 CM		1

PART NUMBER/DESCRIPTION	IMAGE	QTY
YL.EX.99.15.01.001 POST 200 CM		1
YL.EX.99.15.01.002 POST 200 CM		1
YL.EX.99.03.01.001 POST 100 CM		1
YL.EX.99.03.01.002 POST 100 CM		1

PART NUMBER/DESCRIPTION	IMAGE	QTY
YL.EX.99.11.01 SLIDE GUARD	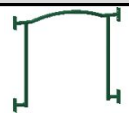	3
YL.EX.99.04.01 U SHAPED PIPE		1
YL.EX.99.016.01 HANDHOLD		2
YL.EX.99.17.01 HANDHOLD WITH ROUNDED MOUNTING PLATE		2

PART NUMBER/DESCRIPTION	IMAGE	QTY
H.04.07.018 NUT M10 WITH FIBER		63
H.04.06.008 WASHER M10		80
H.04.01.102 ROUND HEADED INOX BOLT M10X30		60
H.04.01.060 BOLT 10X70 ROUND HEAD HEX KEY GALVANIZED		4
H.04.01.038 BOLT M10X50 HEX HEAD		2
H.04.01.016 BOLT 10X150 HEX HEAD		4

PART NUMBER/DESCRIPTION	IMAGE	QTY
H.04.03.005 ANCHOR		52
H.04.01.024 BOLT HEX HEAD 10x110		3
H.04.05.003 RIVET 4x15		4
H.04.01.019 BOLT 10x160 HEX HEAD		12
H.04.01.118 BOLT 10X40 ROUND HEX KEY HEAD		16
H.04.01.130 BOLT 8X55 ROUND HEAD HEX KEY GALVANIZED		16

PART NUMBER/DESCRIPTION	IMAGE	QTY
H.04.07.016 NYLON INSERT LOCK NUT M8 GALVANIZED	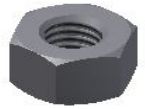	16
H.04.09.041 PHILLIPS HEAD SCREW 4,8X25 GALVANIZED		42
H.04.01.045 BOLT 10X60 HEX HEAD		20
H.04.01.092 BOLT 10x120 ROUND HEAD HEX KEY		10
H.04.01.124 BOLT 10X50 ROUND HEAD HEX KEY GALVANIZED		4
H.04.01.055 BOLT 10X90 HEX HEAD		16

PART NUMBER/DESCRIPTION	IMAGE	QTY	PART NUMBER/DESCRIPTION	IMAGE	QTY	PART NUMBER/DESCRIPTION	IMAGE	QTY
YL.EX.99.05.01 SLIDE GROUND MOUNTING METAL	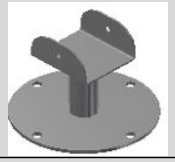	2	YL.EX.99.06.01 DINO CLIMBING SHORT GROUND CONNECTION METAL	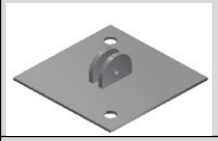	1	YL.EX.99.13.01 DINO CLIMBING DOWN TALL CONNECTION POST		1
YL.EX.99.14.01 STEP GROUND MOUNTING METAL		1	YL.EX.99.11.01.002 POST TO DINO CONNECTION PART		1	H.04.02.037 ALUMINUM COVER	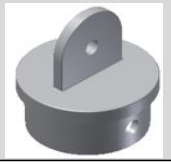	1
YL.EX.99.11.01.001 POST TO DINO CONNECTION PART		1	**ITEMS SHADED THIS COLOR ARE ONLY INCLUDED FOR SURFACE MOUNT**					

ITEMS BELOW ONLY INCLUDED FOR IN-GROUND MOUNT								
YL.EX.99.05.01.IG IN-GROUND SLIDE GROUND MOUNTING METAL		2	YL.EX.99.06.01.IG DINO CLIMBING SHORT GROUND CONNECTION METAL		1	YL.EX.99.06.01 DINO CLIMBING SHORT GROUND CONNECTION METAL		1
YL.EX.99.14.01.IG IN-GROUND STEP GROUND MOUNTING METAL	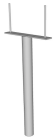	1	YL.EX.99.13.01.IG DINO CLIMBING DOWN TALL CONNECTION POST		1	POST EXTENSION		10

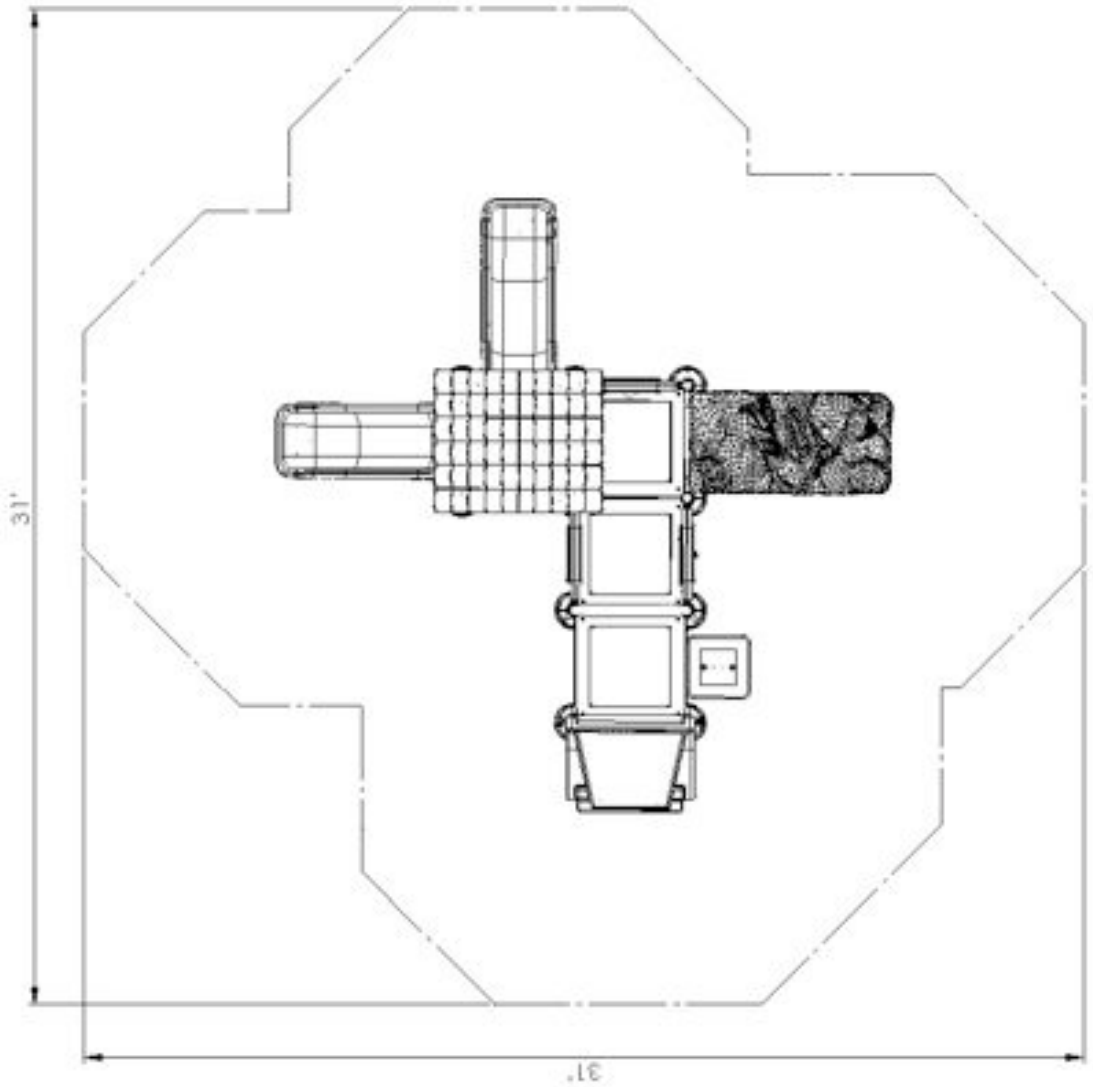
31'
31'

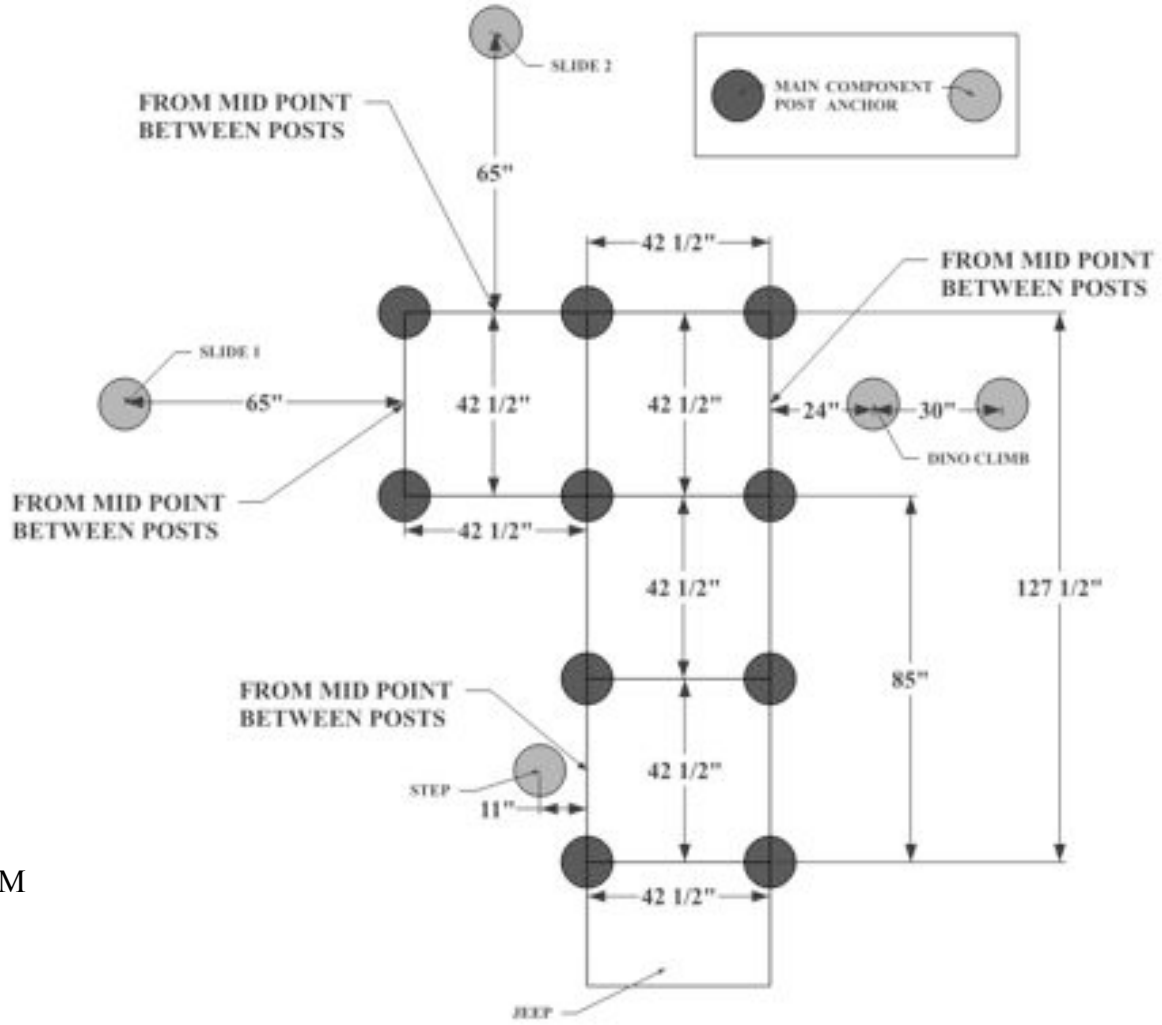

FOOTING DIAGRAM

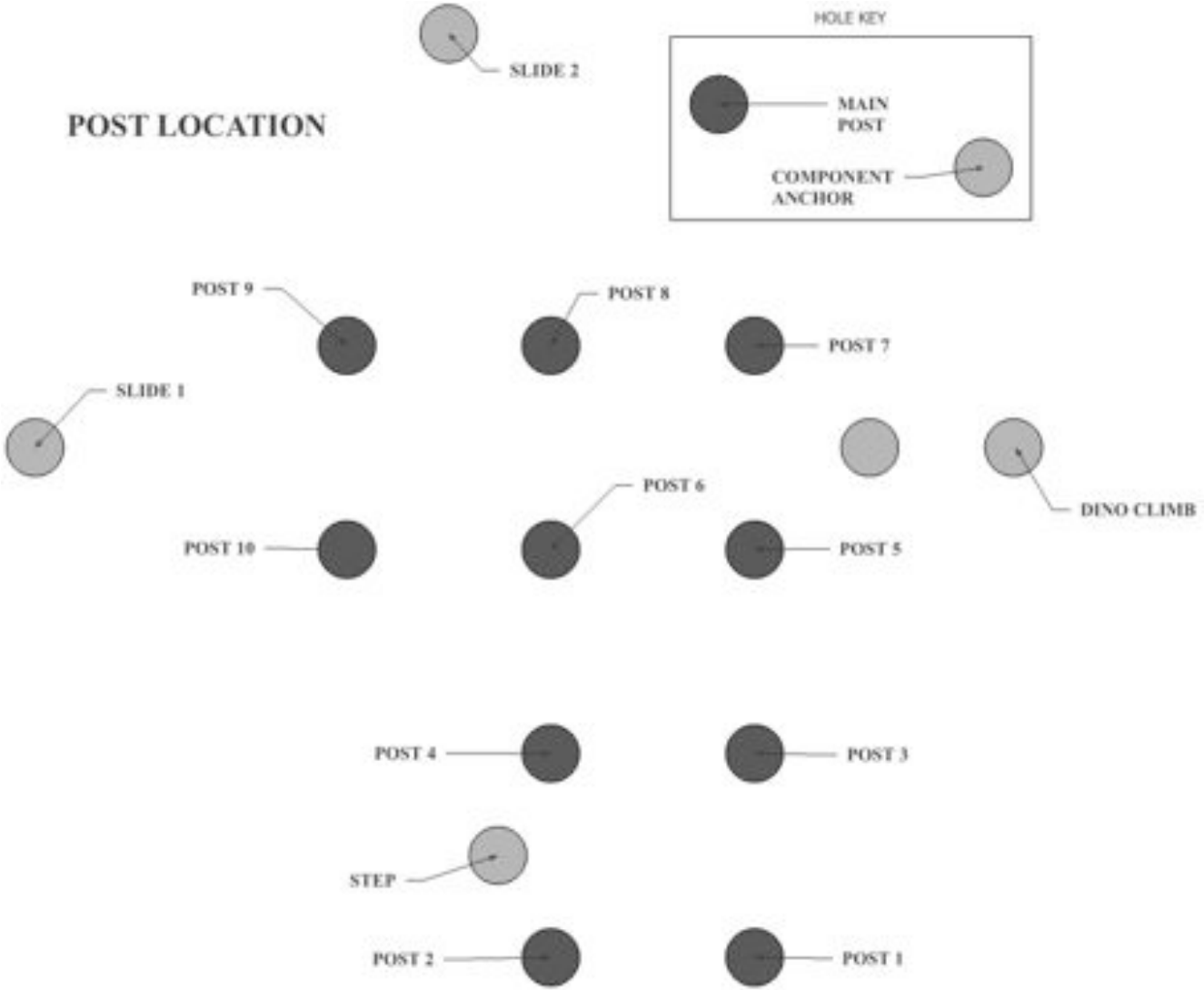
POST LOCATION
SLIDE 2
HOLE KEY
MAIN POST
COMPONENT ANCHOR
POST 9
POST 8
POST 7
SLIDE 1
DINO CLIMB
POST 6
POST 10
POST 5
POST 4
POST 3
STEP
POST 2
POST 1

Important

Please read completely before beginning installation.

This equipment has been designed for safety as well as fun. This equipment has been designed to reduce injuries and therefore must be installed "Step by Step" per our Instructions.

The U.S. Consumer Product Safety Commission (CPSC) published a report stating 79% of all playground injuries treated in U.S. Emergency Rooms was the result of a fall. It is critical that you refer to the Protective Surfacing section of these instructions, located on the next page prior to installing your playground. As the owner you are responsible for the safe installation of not only the play equipment, but also the safety of the site.

When your receive your playground

- Identify all parts by comparing them to the part list.
- Always compare the number of pallets, cartons or other items the BOL has listed with the number actually received. Note any discrepancies on the BOL.
- Also note any obvious damage to the packing materials, pallets or components on the BOL.

Equipment should be inventoried and installed within a few days of receipt. The packing materials are meant to protect the equipment during shipping and not for storage. Heat, weather and sunlight can damage the packing materials, which can impact the components. If storage is required you must store the equipment in a controlled environment away from heat, moisture and sunlight. SportsPlay recommends carefully unpacking the unit and taking an inventory before storing the equipment. Care should be taken with all powder coated parts to prevent damage to the coating. Additionally all plastic panels need to be stored flat to prevent warping.

- You have 30 days from receipt of your equipment to file a claim for missing or damaged parts.

Before you begin

Review your playground footing and top view drawings to ensure your site is large enough. The use zone for playground structures extends 6' (72") from its perimeter. Remember that you may not overlap the use zone of any slide with another playground. These guidelines are available from the CPSC (contact information for the CPSC is located on the next page).

- Read through the entire instruction booklet before beginning the actual installation.
- Before you begin preparing the site or digging any holes you must first contact you local utility companies so they can visit the site and mark all of the buried utilities. In the U.S. you may call 811 and your call will be routed to your local utility center.
- This equipment was designed to install on a clear and level site. There should be no more than 3" of grade variations in a 10' span.
- Footing layout is the first critical step once the installation begins. Mark all holes using the footing diagram. Prior to digging holes compare the measurements from the footing diagram to the actual site markings to ensure accuracy. Then check it again!
- Our in-ground posts are manufactured to accommodate 12" of protective surfacing. (12" loose and 9" compacted)

- Our surface mount posts are manufactured for surfacing levels of 3" – 12". At 12" the surfacing will be as high as the slide bed but when compacted there will be space. At this deck height it is ok to have the slide bed end at the top of the surfacing.
- Do not leave the jobsite un-attended during installation unless all access points to the play area are secure, all bolts and fasteners are tight and all ground holes are covered.
- SportsPlay Equipment inc. has provided two warning labels that state: "WARNING – Installation over a hard surface such as concrete, asphalt or packed earth may result in serious injury or death from falls." These labels must be installed on vertical posts as per ASTM F1487. Instructions for the placement of these labels are included in this booklet.
- SportsPlay will provide manufacturer identification labels that must be installed on the structure during installation per ASTM F1487. Installation instructions for these labels are included in this instruction manual.
- Labels must be replaced when they are no longer legible. Contact your distributor for replacement labels.
- Evaluate the site for drainage. To ensure good drainage around the equipment consult a local professional.

Safety Surfacing

WARNING! – INSTALLATION OVER A HARD SURFACE SUCH AS CONCRETE, ASPHALT OR PACKED EARTH MAY RESULT IN SERIOUS INJURY OR DEATH FROM A FALL

Because accidental falls are likely to occur around play equipment, SportsPlay Equipment Inc. recommends that a resilient safety surfacing that will meet standard ASTM F1292 be placed under and around the structure and extend throughout the entire use zone.

SportsPlay Equipment Inc. does not manufacture safety surfacing. All manufacturers of safety surfacing require different depths of surfacing for fall heights. Consult your surfacing supplier about the required safety surfacing depth for your play equipment.

This equipment was designed for multiple mounting options, all of which require safety surfacing. This unit is designed for 12" of safety surfacing that compacts to 9". If using the in ground post extensions you will have to adjust the depth of the post depending on the amount of surfacing the surfacing supplier recommends. The surface mount (concrete or spike method) can still accommodate this amount of surfacing but the surfacing will actually sit on top of the post feet and step.

Refer to the CPSC Handbook for Public Playground Safety for the recommended type and depth of the protective surfacing as well as all other playground safety concerns.

For a copy of the most current issue of the CPSC Handbook for Public Playground Safety, write to:

You must consider the type of safety surfacing you will use before beginning the installation process. There are two general types, organic/loose fill or synthetic unitary (pour in place). You must know which type of surfacing you are going to use prior to installing the playground.

If loose fill surface material is to be used (example: wood mulch) you will need to consider containment borders. There are many products to choose from including hard plastic and natural products such as wood (Creosoted railroad ties are NOT recommended for use as borders in a play area). Loose fill materials are easily displaced so use of some type of containment border is necessary to keep the surfacing material inside the intended area. Some customers also prefer to have a weed mat installed to prevent weed growth. Choose a mat that will prevent growth but will also allow for drainage.

Tools and Materials

List is for tools and materials needed that are not included with the playground

Follow manufacturer's guidelines for proper use of tools and materials.

- The best method (also the easiest) to dig the postholes is using a tractor with a 12" auger attachment.
- Shovels (long handled spades)
- Post hole digger
- Wheelbarrow
- Large construction bar (5')
- Pry bar
- Claw hammer
- Large dead-blow rubber hammer
- Small sledgehammer to use in blocking the posts
- Vise grips (various sizes and styles)
- Strong and sturdy step ladders
- Socket set's (1/2" & 3/8" drive)
- Extension cords & power supply
- Drills
- Drill bits : ½, #7 and 11/16" (concrete)
- Levels – Magnetic torpedo and 4' long levels
- Scrap lumber to use for shims in post holes to keep posts level
- Blocking materials for the post holes (bricks, concrete blocks, etc.)
- 4' Bar Clamp
- Files and sand paper
- Safety surfacing
- Spray paint to mark holes
- String line
- Cement (2,500 psi minimum)
- Straight line or transit level (and tripod) for ensuring hole depths are at the same level

This page was intentionally left blank

BEFORE BEGINNING

SITE REQUIREMENTS

The Playground system is designed to suit a level site. Should there be any falls or slopes on the site; care should be taken to accommodate the entry and exit points and to maintain the correct height. There should not be more than 3" of drop in grade per every 10'.

The site must be inspected for natural obstacles such as roots or rocks that may be a trip hazard, poor drainage and sharp objects such as glass.

Every state has different rules and regulations governing digging, some are stricter than others. In addition, 62 separate One Call Centers serve different areas of the country; now 811 will connect you directly to your local One Call Center. Prior to digging, be sure to call 811 or the local One Call Center to prevent accidentally disrupting local utility service.

MAINTENANCE:

As an owner, it is most important that you are aware of your responsibility to insure safe use of your new equipment. It is necessary to install equipment according to the installation instructions provided and inspect the equipment at regular intervals. During inspection, if any part is found damaged or excessively worn, equipment should be closed immediately. A maintenance section is included in the appendix of this instruction booklet.

If a part is missing or damaged the playground must be put out of service while the part is replaced. Lack of maintenance will result in premature wear, reduced life expectancy, and possible failure that may result in injury.
All SportsPlay Equipment play events have been engineered to meet all applicable safety guidelines, but if installed
Improperly, these problems may occur:

- Entrapment gaps (between 3 1/2" and 9")
- String Entanglements
- Protrusions

Make sure that any bolt end that protrudes more than 2 threads past the face of the nut is trimmed and de-burred smoothly. Always double-check your work.

Installation must adhere to the manufacturer's assembly manual and all other applicable safety guidelines.

PLAY AREA:

The area immediately above and around the play structure must be free of any obstructions such as:

- Trees
- Other Play Equipment
- Buildings
- Overhead Power lines

CHILDREN MUST BE SUPERVISED AT ALL TIMES. No playground is safe without adult supervision!

Reading this entire manual before beginning the installation will help you to ensure your equipment is installed and maintained correctly.

The use zone for this equipment shall extend a minimum of 6' in all directions from the perimeter of the equipment.

The use zone for adjacent stationary equipment may overlap. If the deck height for that equipment **is no more than 30"** above the protective surfacing **the use zone is 6'**.

The use zone for adjacent stationary equipment may overlap. If the deck height for that equipment **is more than 30"** above the protective surfacing **the use zone**

INSTALLATION TIPS & TROUBLE SHOOTING

- SportsPlay Equipment Inc. recommends pre-drilling the holes in the post when attaching a four-hole bracket with a number #7 drill bit. This will make the attachment of the four-hole bracket with the self-tapping screws easier and it will prevent damage to the screw head during installation.
- Hardware can occasionally be difficult to use particularly if you need to take them out to make an adjustment. It is recommended that you add a drop of oil to bolts that may have to be removed before you install them.
- Do not tighten bolts all the way until the unit is completely assembled and all components are square and level unless instructed to
- Identify and separate all parts by referencing the detail drawings and the parts list.
- As you unpack and separate the components, use some type of cushioning material (cardboard, blankets, etc.) to prevent damage to the components. This is particularly true for all powder coated components.

MOUNTING OPTION

DO NOT MOUNT THE UNIT AT THIS TIME. THIS SECTION IS ONLY INTENDED TO EXPLAIN THE OPTIONS AVAILABLE TO YOU.

The Explorer center can be mounted in-ground with post extensions (included), concrete surface anchors (included) or with spikes (**not included**).

1) The easiest option is to hammer long spikes into the plates welded on the posts to mount it to the ground. While this is the easiest it is also the least secure.

2) You can install it with concrete anchors on a concrete pad if you are using rubber pour in place surfacing or onto concrete piers.

3) Finally you can attach the post extension to the post and connect it with the self-tapping screws (included). Then you dig the holes (utilize the footing cutaway drawing) place post into the holes, assemble the unit and pour concrete into each hole.

NOTE: YOU SHOULD ONLY RECEIVE THE PARTS THAT ARE SPECIFIC TO THE MOUNTING METHOD YOU ORDERD

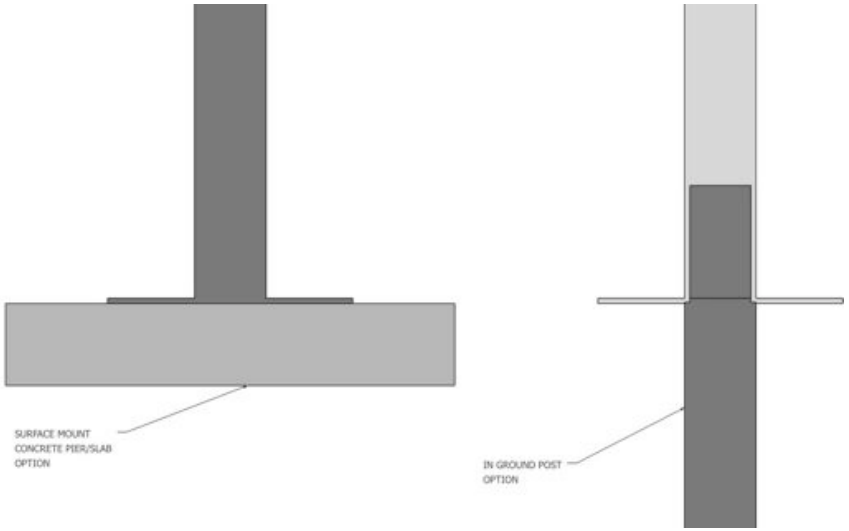

ATTACH ARCH

1) Attach arch (99.04.01) to posts 3 & 4 using bolts (04.01.024) washer, hex nut and rounded bolt cap (02.04.010)

NOTE:

It is normal for the post to have some deflection (when the Arch is attached to both posts one of the posts is bent our of position, another words the two posts are not parallel to each other). When installing the deck to post 3 and 4 you will need to push posts into position and then bolt the deck to it.

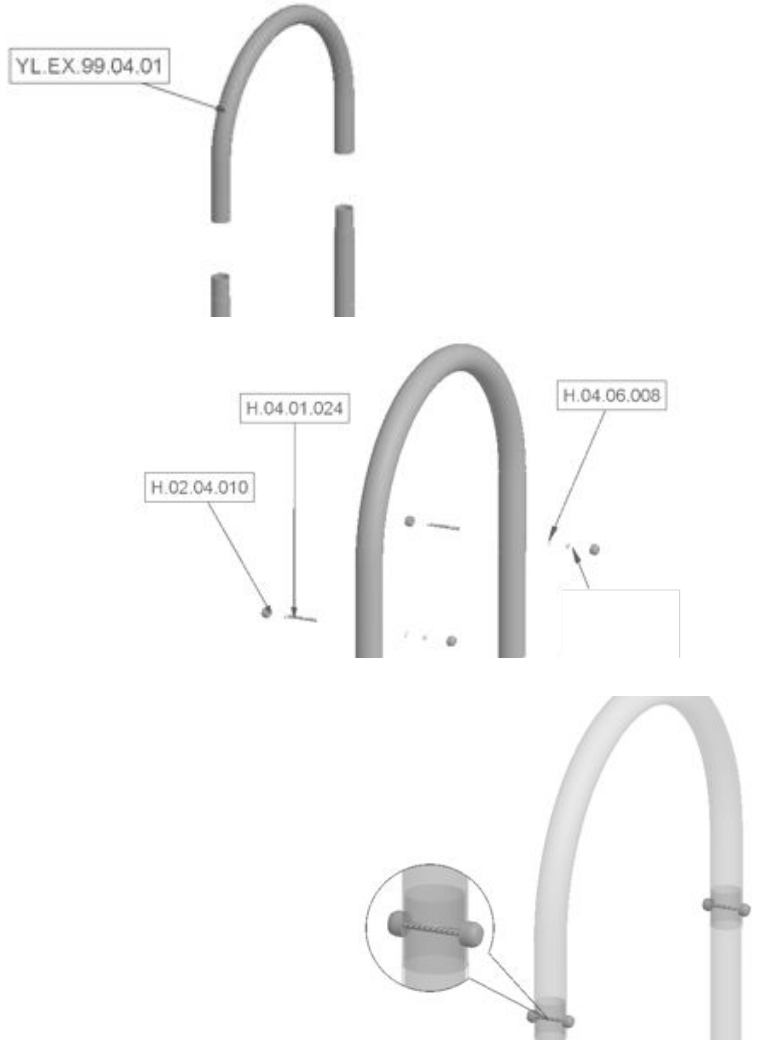

MOUNTING PLATFORM CONNECTION BRACKET TO POST

This is a preliminary step that will help to accurately layout the equipment and should be done before laying the posts out. It will help to ensure the posts are orientated correctly.

Platform connection brackets attach to the posts in various locations depending on which post it is. Some posts only require 1 and some require 2 brackets because that post supports two decks. However only one post, (post 6) requires three brackets.

Post's 1, 2, 7, 9 and 10 only require one each

Post's 3, 4, 5 and 8 require two each

Post 6 requires three

STEPS

1) Attach platform connection bracket (99.07.01) to post by inserting two (04.01.102) m10x30-rounded bolt through the bracket and into the factory installed nuts in the post and tighten completely.

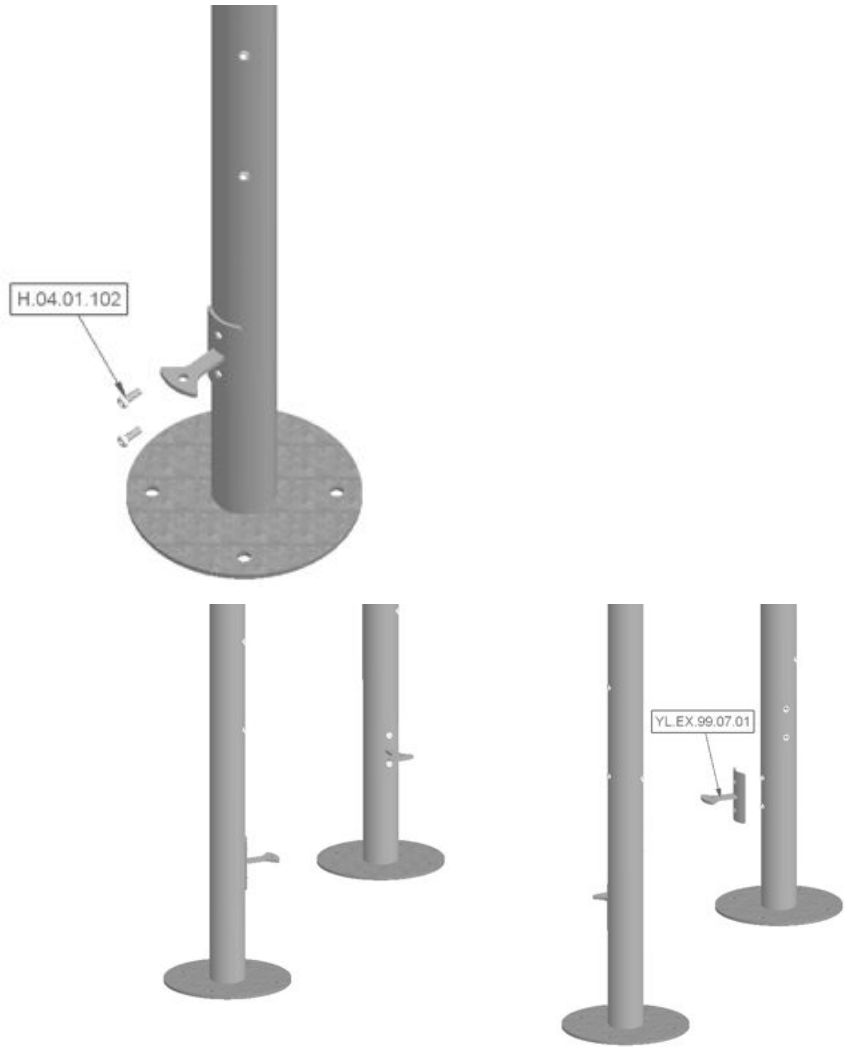

SURFACE MOUNT STEPS

Follow these initial steps if mounting to concrete surface, piers or with spikes.

Utilize all the drawings on pages 3-9 to help orientate the posts into the proper position

1) If mounting to concrete surface or if you are using spikes, you may discard the posts extensions, as you won't need them.
2) Follow steps on previous page to attach all the platform connection brackets to the posts
3) Identify the posts (marked on the plate welded to the bottom and place them in there approximate location utilizing the post location drawing on page 9
4) Attach platforms to brackets and insert bolts but do not tighten bolts at this time (except for where the first platform connects to posts 3 and 4 due to the deflection caused by the arch.
5) Repeat these steps for the remaining 3 platforms.
6) If using spikes you can continue the install and spike the posts into position at the end.
7) If using anchor bolts you can drill the holes and install the anchors through the mounting plate.
8) Drill 11/16" holes into concrete using and insert anchors (take nuts off).
9) Place unit onto anchors and lightly tighten nuts onto anchors. Continue with assembly (skip next section in regards to mounting with post extensions.

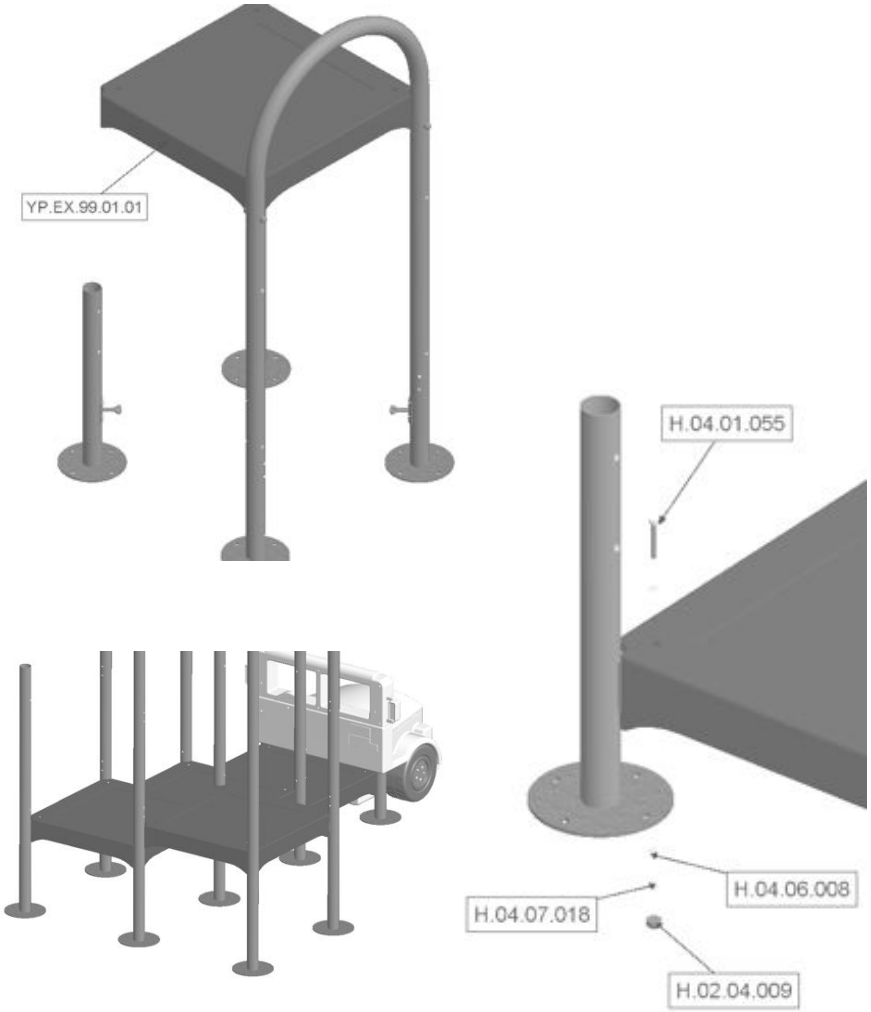

INSTALLATION USING POST EXTENSIONS

- Total footing depth is 27" less the height of the surfacing plus the height of the blocking material. For example, if you were using 12" of surfacing the footing hole would need to be 15" plus the height of the blocking material (front cutaway view to the right).
- If the Play structure is installed on an unleveled grade you must adjust the footing depth to accommodate the grade. For instance, if the grade for this component is 1" higher than the surface grade of the main playground post you must dig your footing hole 1" deeper. We recommend using a transit to ensure all holes are at the same elevation
- You must place the bottom of the support post or slide leg on a suitable flat blocking material to prevent it from sinking further into the soil. We recommend you use a brick, block of wood or several inches of gravel. The footing depth does not include this blocking material since materials used often vary.

1) Use images on the right side of this page to aid in the following steps.
2) Drill three holes into each post 1" above the mounting plate at the bottom of the posts using a #7 bit (image on next page). These holes will be used to secure post extensions to the posts using the self-tapping screws.
3) Once holes have been drilled into posts you will need to insert the extension into the post and secure using the screws.
4) Lay the platforms on the ground utilizing the drawings on pages 3-9 and mark the corners, which are the post locations. Move components out of the area and dig holes to desired depth. Insert blocking material and posts (utilize the post location drawing on page 9) into holes and attach decks to platform brackets (***use the drawings on the previous page for installing the platforms***) and insert bolts but do not tighten platform hardware (except posts 3 and 4),
5) As you attach the platforms ensure they are level and the posts are square (squaring the posts will be easier as you attach the panels and other components between the posts, level platforms is a must at this point. You may need to adjust your hole depth if necessary.

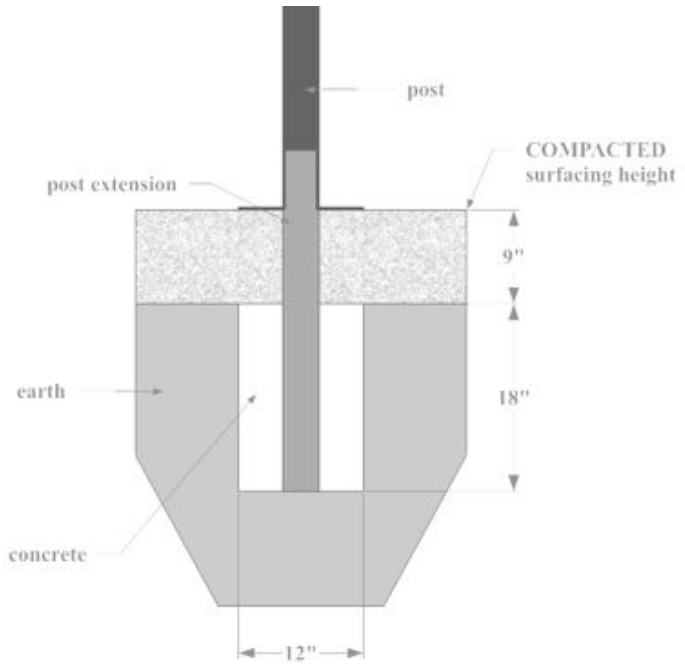

POST EXTENSTION CON'T

- It is the owner/installers responsibility to check local building codes and to comply with those codes. All footing depths listed here are recommendations and local soil types and frost lines may require a deeper and/or wider footing depth. If that's the case you must add more blocking material to accommodate the deeper footing, as the post length will still only be installed at the depth listed in this instruction manual.
- Assemble the entire unit before adding the concrete unless instructed to do so in the individual component instruction sections.

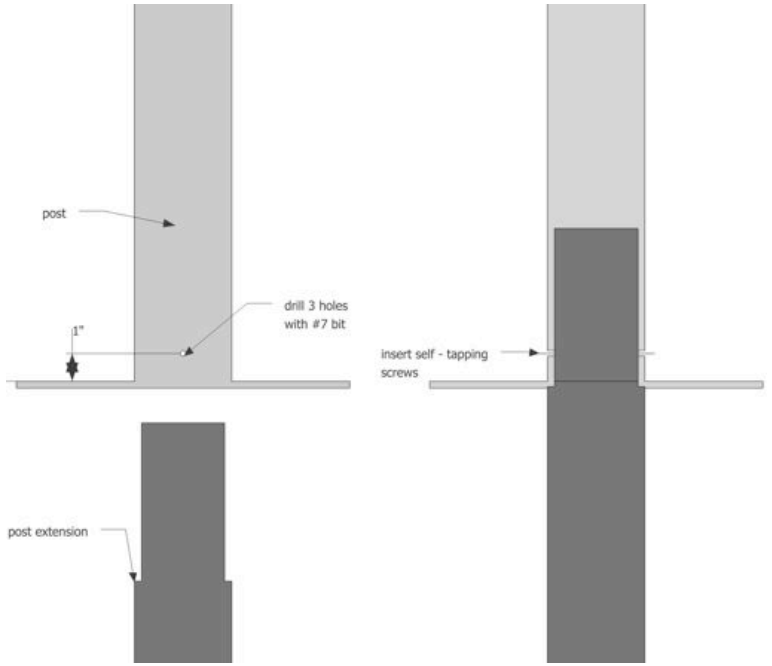

INSTALL EQUIPMENT

After the mounting steps have been completed (Do not tighten anchor bolt nuts if surface mounting or pour concrete if installing in ground at this time), you can continue the installation here.

ATTACH JEEP

1) Slide Jeep body (01.04.01) onto posts 1 & 2 and slide until the bottom of the jeep until there is no gap between it and the platform.
    a. **<u>NOTE:</u> It may be necessary to pull the posts using a pry bar inside of the post to pull the posts to line up with the holes in the jeep. This is normal.**
2) Slide jeep window (99.09.01) onto posts 1 & 2 until the bottom is sitting on the jeep body.

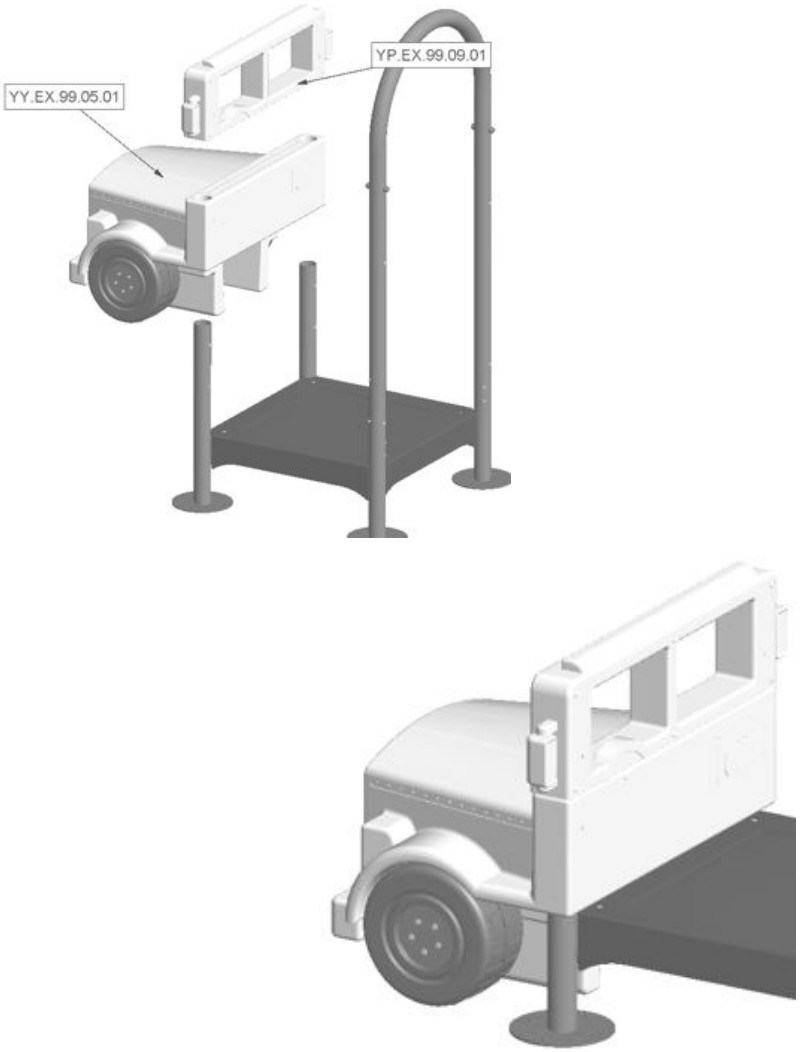

ATTACH SAFETY FRAMES

1) Attach safety frame (09.11.01) between posts 5 & 7 by inserting eight (04.01.102) m10x30-rounded bolts through the frame and into the factory-installed nuts in the posts. Do not tighten completely these bolts until the entire playground has been installed
2) Repeat step one for the other two frames that install between posts 8 & 9 and posts 9 &10.
3) Once the frames have been installed you may tighten all the platforms to the platform brackets

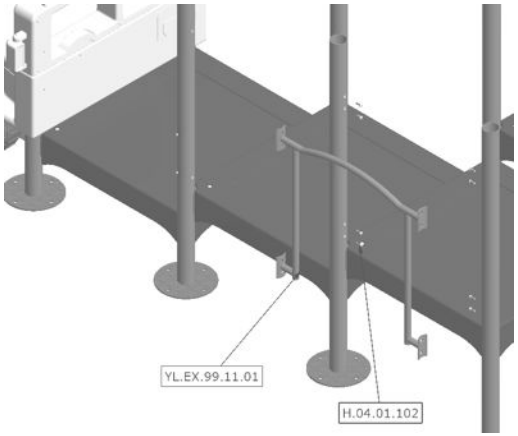

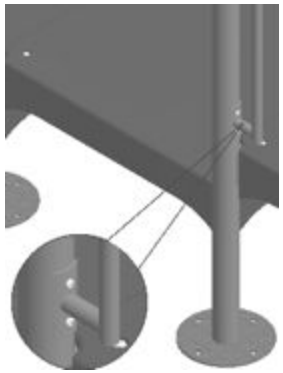



ATTACH SLIDES

1) In order to attach the slides (99.06.01) to the platform you must drill three holes into the platform. To correctly mark and drill the holes follow the following steps:
    a. Find the center of the platform and center of the slide bed entry
    b. Line those center points up and keep the center point of the slide bed (the bed is the part you sit on while sliding) flush with the top of the platform.
    c. While someone holds the slide in position (the center points should line up and the bed should be flush with the top of the platform) another person should mark the mounting holes on the platform through the three mounting holes on the slide.
    d. Once the holes have been correctly marked on the side of the platform, drill through the platform using a 1/2" drill bit. ***It is important to keep the drill bit level as you drill through the side of the platform in order to attach the slide*** (the side of the platform has two walls and you need to drill through both of them)
2) Once the holes have been drilled you can attach the slide to the platform by inserting a bolt (H.04.01.16) through a bolt cap (H.02.04.009), then a washer (H.04.06.008), then the slide, then the platform, then another bolt cap, then another washer, then a nut (H.04.07.018). ***Do not tighten nuts or put the caps on the bolts at this time.***

You will only tighten the nuts completely after the ground metal is in its final position and the slide has been attached to the ground metal

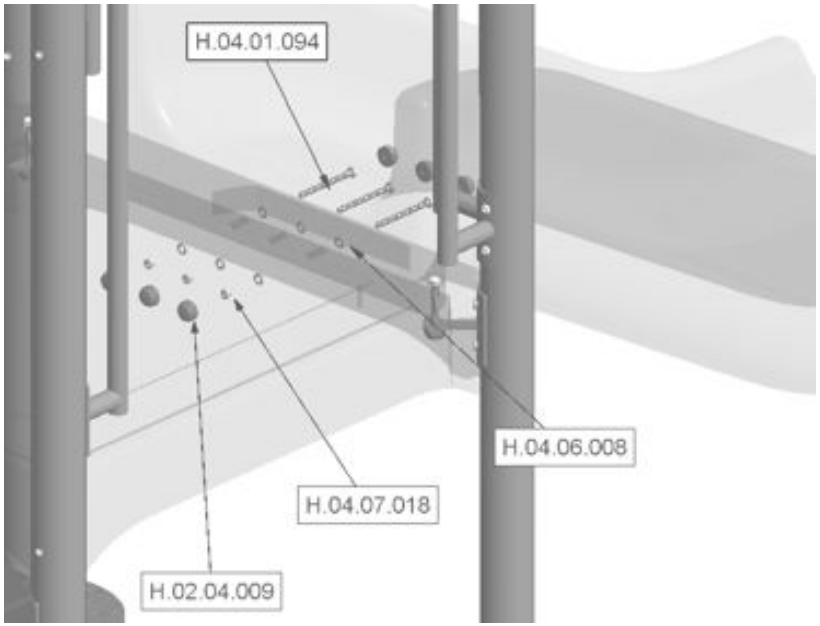

1) Identifying the ground metal – The images to the right include the surface mount metal. The in ground metal attaches to the slide the same way but the post goes in the ground instead of mounting on the surface.
   a) If you are surface mounting the playground (concrete pad, pier or spike) then you will have received and use the ground mounting metal with the part number YL.EX.99.05.01.
      i) This will connect to the slide as described below. It will mount to the pad like the main posts do as described in the surface mount section at the beginning of this instruction booklet.
   b) If you are mounting this in ground you will use YL.EX.99.05.01.**IG**.
      i) This will connect to the slide as described below. It will mount in-ground just like the main posts do as described in the post extension section at the beginning of this instruction booklet.
2) Place the ground metal in position under the end of the slide.
3) Ensure the slide is in its proper position (related to the platform) and drill holes through the holes on each side of the metal and into the slide foot.
4) Attach the metal to the slide by inserting the bolt (H.04.01.16) through the open bolt cap (H.02.04.009), washer (H.04.06.008), then the ground metal, then the slide and out the other side. Slide another open bolt cap and washer on the other side of the bolt and secure the bolt with a nut (H.04.07.08). Do not tighten until after the slide has been completely tightened at the deck.
5) Tighten slide to deck and insert the bolt cover caps.
6) Tighten slide to ground metal and insert the bolt cover caps.
7) Repeat steps for second slide

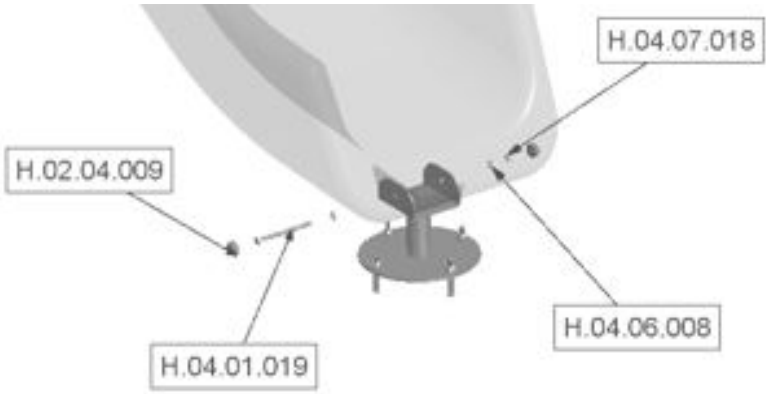

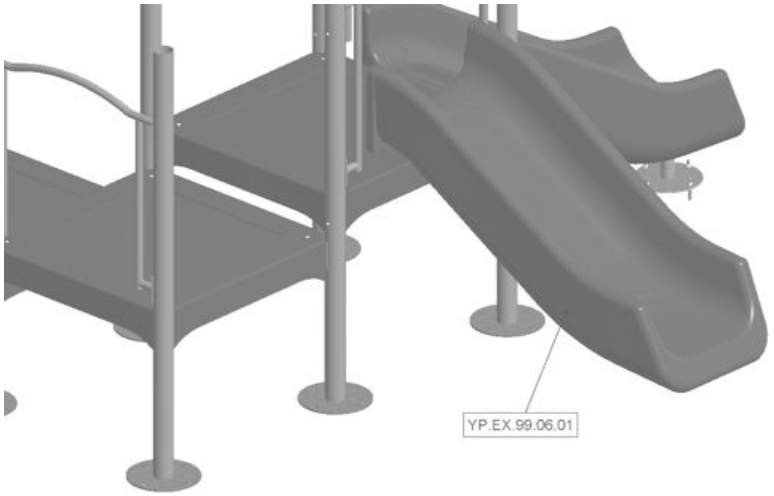

ATTACHING THE DINO CLIMBER

Just like with the slide, the dino climber (YL.EX.99.11.01) requires ground anchor metals. The climber requires two ground metals

- Climbing short ground metal (only one depending on mount type)
  - YL.EX.99.06.01 – SURFACE MOUNT
  - YL.EX.99.06.01.IG – IN-GROUND
- Climbing tall ground metal (only one depending on mount type)
  - YL.EX.99.13.01 – SURFACE MOUNT
  - YL.EX.99.13.01.IG – IN-GROUND MOUNT.
    - Regardless of which tall ground metal you have it will also include an aluminum cover H.04.02.037

For the illustrations to the right we are showing only the surface mount option.

Do not mount metals to the ground at this time. Footing locations and detailed instructions on mounting the metals to the ground can be found in surface mount and extension post sections at the front of this instruction booklet.

Do not completely tighten hardware until the entire climber is installed.

1. Place the ground metals in the proper location (refer to image)
   a. Tall (YL.EX.99.13.01) is closest to the platform
   b. Short (YL.EX.99.06.01) is furthest
2. Insert aluminum cap (H.04.02.037) into the top of the tall ground metal
3. Attach post to dino connection part YL.99.11.01.002 to the tall ground metal by first sliding the connection part into position over the cap and inserting a bolt (H.04.01.038) through a washer (H.04.06.008) a open bolt cap (H.02.04.009) and then through the connection part and tall ground metal.
4. Lightly secure the bolt in place by sliding another open bolt cap and washer over the bolt and attaching the nut (H.04.07.018)
   a. DO NOT TIGHTEN NUT OR INSTALL CAP COVERS AT THIS TIME.
5. Repeating steps 3 & 4 you can attach the dino connection part (YL.EX.99.11.01.001) to the small post.

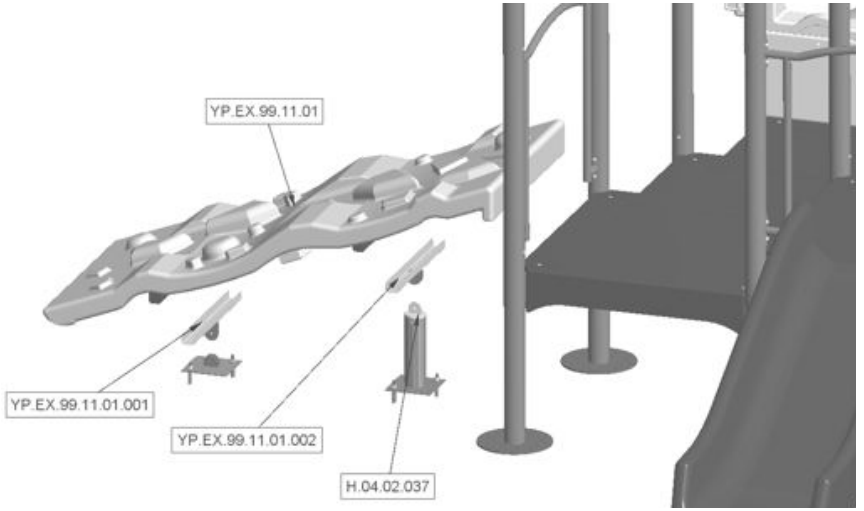

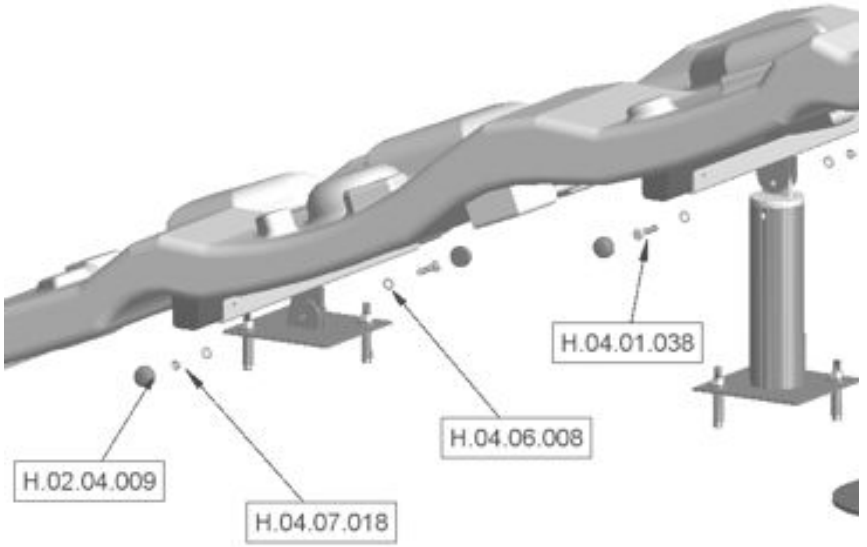

6. Position the dino climber onto the connection parts.
7. Ensure the climber is flush with the top of the platform
8. Mark the holes on the side of the platform, move the dino climber out of the way and drill using a ½" bit.
9. Place the climber back into position (in the post connection parts and flush with the platform) and ensure the holes are in alignment
10. Attach dino climber to platform by inserting a bolt (H.04.01.XX) through a washer (H.04.06.008) through the climber and the platform. Slide an open bolt cap (H.02.04.009), another washer and use a nut (H.04.07.018) to secure it. (DO NOT TIGHTEN OR ATTACH BOLT COVER CAP AT THIS TIME) Repeat for the rest of the holes
11. Attach Climber to connection pieces by first ensuring the climber is positioned properly to the platform and the ground metal. Drill holes through both connection parts and the climber.
12. Once the holes have been drilled you can attach the climber to the connection metals by inserting a bolt (H.04.01.060) through the metals and climber then through a bolt cap (H.02.04.009), then a washer (H.04.06.008) and secure with a nut (H.04.07.018). ***Do not tighten nuts or put the caps on the bolts at this time.***
13. Secure aluminum cap to the tall post by inserting a bolt through the cap and secure with a washer and a 2nd cap.
14. Once all the hardware has been assembled you may tighten and insert the bolt cap covers.

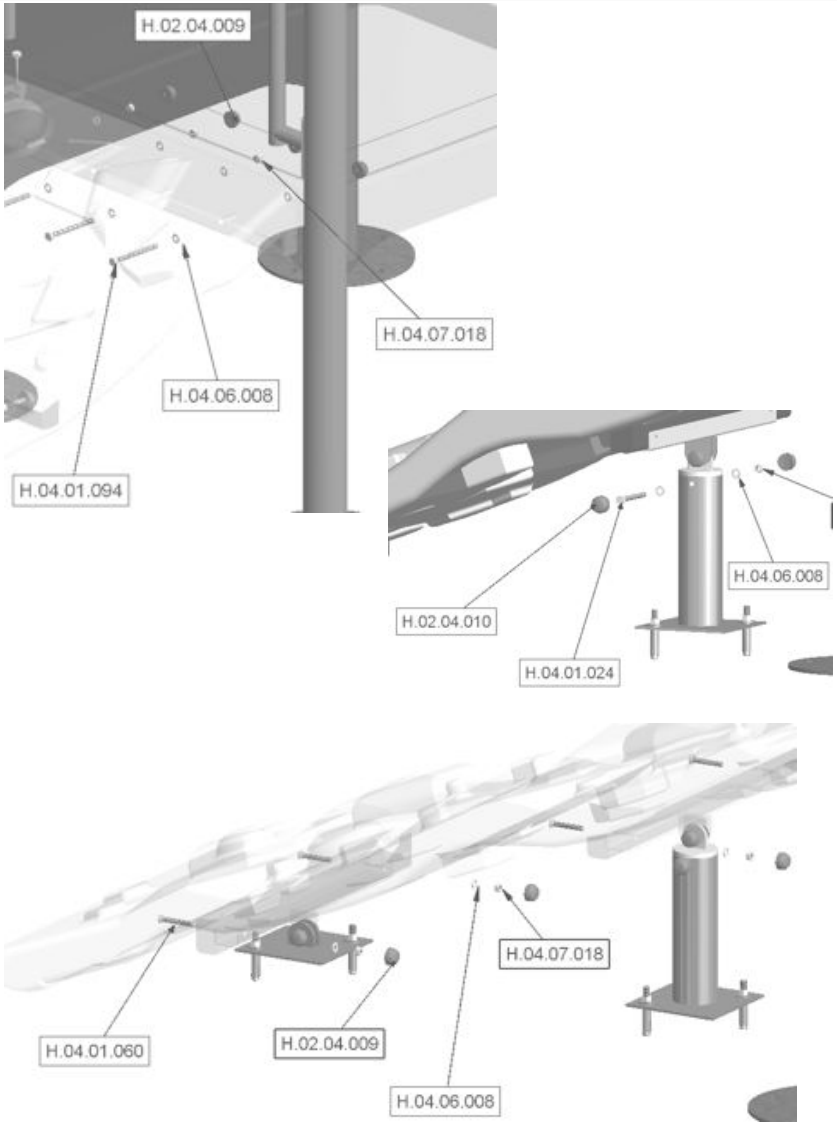

ATTACHING HAND HOLDS

1. Attach handhold (YL.EX.99.016.01) to the Jeep body (this handhold has a flat mounting surface) and window by inserting bolts (H.04.01.02) through the handhold, jeep and into the factory installed nuts on posts 1 & 2. Once in position it is ok to tighten the bolts.
2. Attach handhold (YL.EX.99.017.01) to posts 3 & 4 (this handhold has a round mounting surface) by inserting bolts (H.04.01.02) through the handhold and into the factory installed nuts on posts 3 & 4. Once in position it is ok to tighten the bolts.

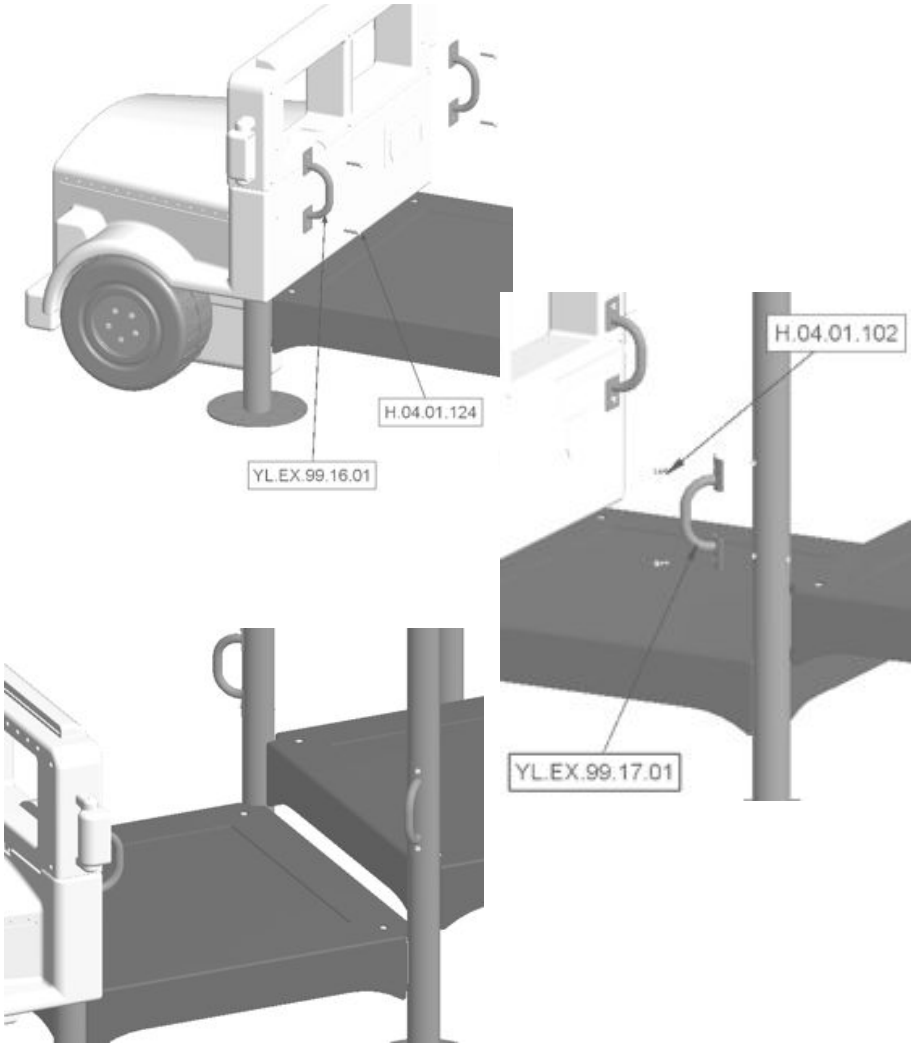

ATTACH ROOF

1. Slide the roof (YP.EX.99.07.01) onto posts 7, 8, 9 and 10. Ensure roof is seated completely onto posts.
2. Each corner of the roof has a flat spot. On this flat spot you need to drill a ½" hole though the roof and post for each corner
3. Once the hole has been drilled you can secure the roof to the posts by inserting a bolt (H.04.01.06) through a washer (H.04.07.018) and then through the roof and post and out the other side. Slide an open bolt cap (H.02.04.010) another washer and secure in place with a nut (H.04.06.008). Do not tighten or put cap covers in until all 4 bolts have been inserted.





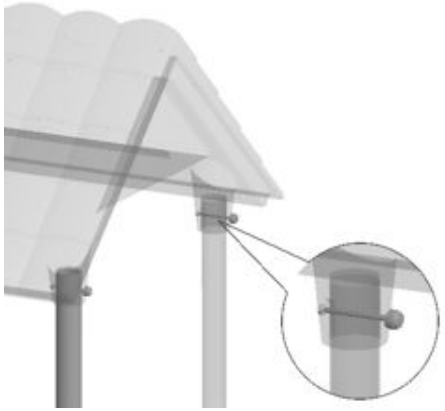

TRANSFER STEP

1. If you are going to ***surface-mount*** the step, you must position the ground mounting metal (YL.EX.99.14.01) for the step (YL.EX.99.12.01. You should place the mounting metal into the step and set into position. Position the step so that it is centered with the deck and also up against the deck. Being careful not to move the ground metal, slide the step off of the ground metal and anchor it in place. **Continue to step 3**
2. If you are mounting the step into the ground, you must first position the ground mounting metal (YL.EX.99.14.01.IG) for the step (YL.EX.99.12.01). Position the step so that it is centered with the deck and also up against the deck. Being careful not to move the ground metal, slide the step off of the ground metal and brace the metal in place. Anchor with concrete. **Continue to step 3**
3. Once ground metal has been anchored or when the concrete has set you can position the step over the metals.
4. Once in position secure the step to the anchor by sliding an open bolt cap (H.02.04.009) then a washer (H.04.04.00 over the threaded rod from the ground metal and secure in place with a nut (H.04.07.018).
5. Tighten nuts and insert bolt cover caps.

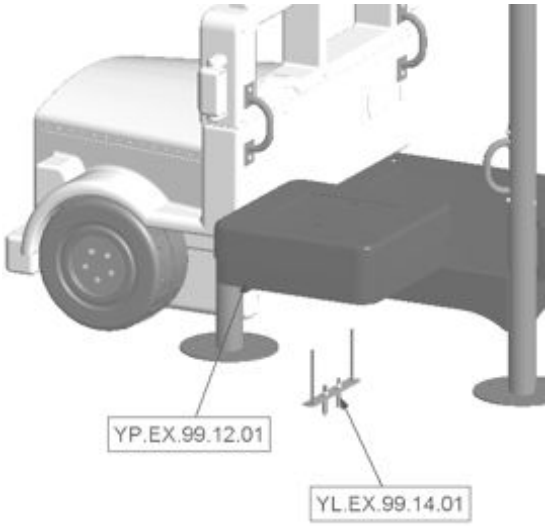

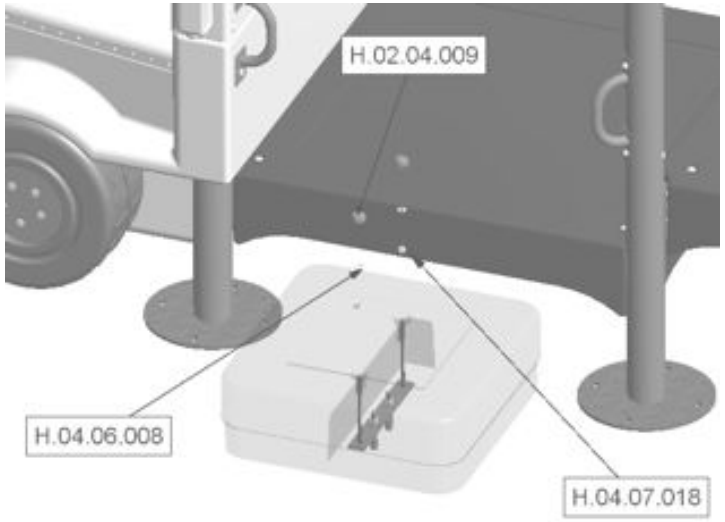

ATTACHING PANELS

There is no required position for each specific panel but every opening above the first deck should have one unless there is a slide or climber in that position. Refer to drawings on pages 3-9 for panel positions if this is not clear.

1. First you must attach the panel clamp (H.02.04.047) and Flange (h.02.04.083) to the required post by sliding the clamp over the flange and putting it into position over the factory installed nuts on the posts.
2. Secure clamp and flange into position with a bolt (H.04.01.118). You may tighten these bolts.
3. Each panel requires (4) of these clamps. Install the others following steps 1 & 2 above.
4. Open clamps and insert panel before closing them again.
5. Secure panel to clamps by inserting a bolt (H.04.01.130) through the clamp and panel and secure with a nut (H.04.07.016).
6. Repeat steps 1-5 on the remaining panels.

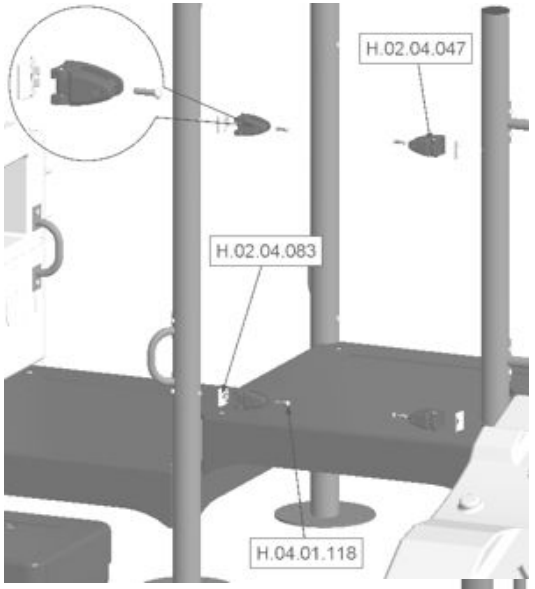

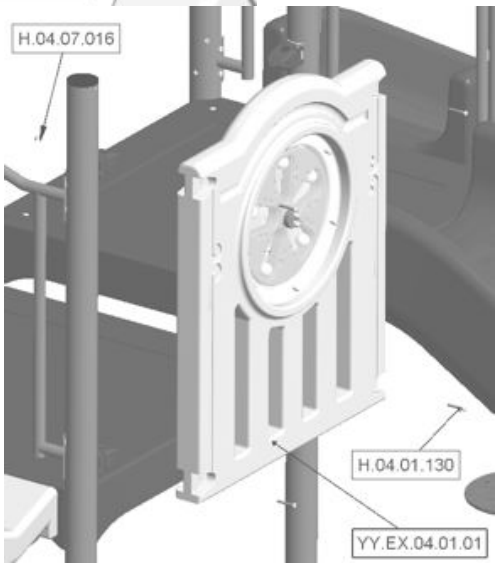

SQUARE, PLUMB AND ANCHOR.

Now that all the components except for the post covers have been installed you should start the final leveling, squaring and tightening of the equipment.

Pick a starting point and work your way around the equipment tightening all the bolts as you go. You will need to level everything as you go. You may also need to shim some of the posts up and brace some of the posts until final anchoring has taken place.

Once everything is level and secure, tighten the anchor bolts or pour the concrete. Allow the concrete to set (per the manufacturers guidelines before attaching the post covers.

ATTACH POST COVERS

1. Slip post cover (YP.EX.99.04.01) into position over post.
2. Secure using two bolts (H.04.01.045), four bolt caps (H.02.04.009) and two nuts (H.04.07.018)
3. Tighten bolts
4. Repeat for remaining post caps

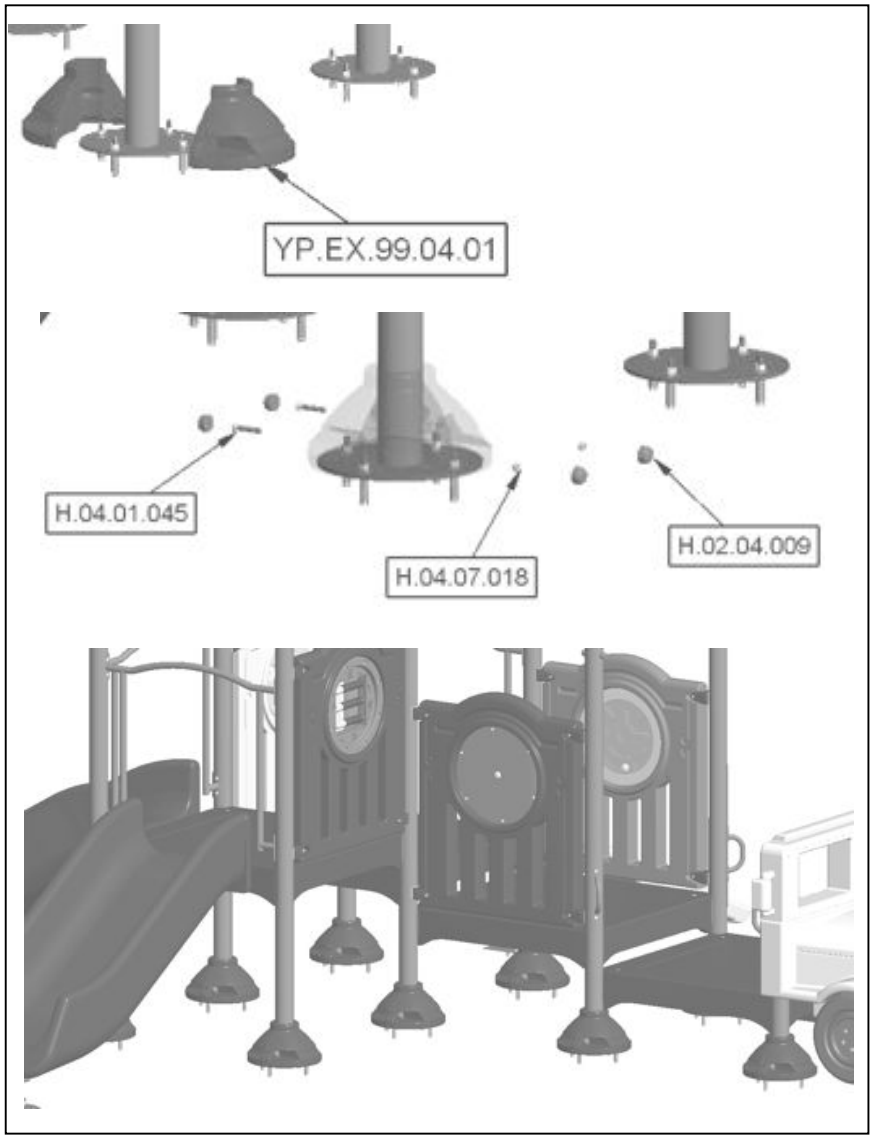

INSTALLING KICK PLATES

The final step for assembling this unit is to attach the three kick plates (H.08.18.009) and secure them into position between each platform

1. Position the kick plate between the first and second platform, ensuring that the top of the kick plate does not extend above the top of the higher platform
2. Secure kick plate to the upper platform by inserting screws through the holes in the kick plate and into the platform.
3. Secure the kick plate to the lower platform as outlined in step 2.
4. Repeat steps 1-3 between the other platforms.

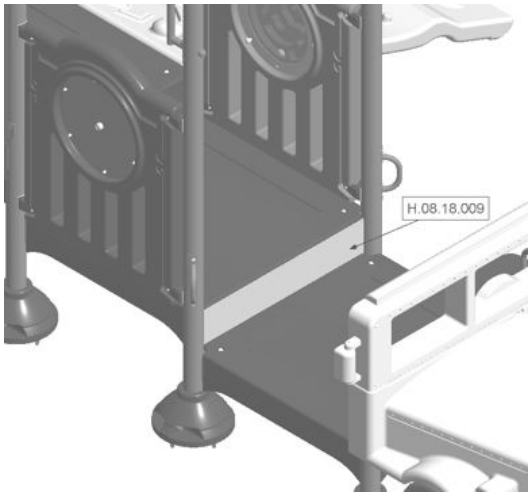

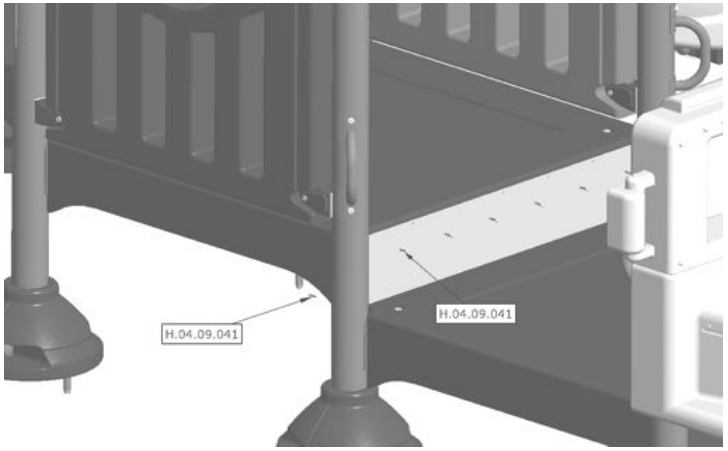

LABEL INSTALLATION

SportsPlay Equipment Inc. has included multiple labels that must be installed on the playground structure as recommended by ASTM.

There are four different labels that, as the owner you are required to install and maintain. If a label becomes damaged please contact your distributor for replacement.

1) Warning label – Qty 4
2) Supervision and Age Appropriateness – Qty 4
3) Manufacturers Identification – Qty 4
4) Safety Surfacing – Qty 1 label per post

__1. **Identify the proper location.** The image to the right shows the proper placement for the labels on the playground post. With the exception of the surfacing labels all labels must be placed between 48" and 60" from the top of the surfacing on the main posts in a conspicuous location, on all four sides of the playground that will be visible to adults.

The surfacing labels shall be placed so that the arrows on the label are level with the top of the recommended surfacing.

__2. **Apply.** Once you have identified the proper location for the labels ensure that the location is clean and dry, remove the backing from the label and attach them to the post. Smooth out any wrinkles or bubbles by rubbing the backing piece on the surface of the label.

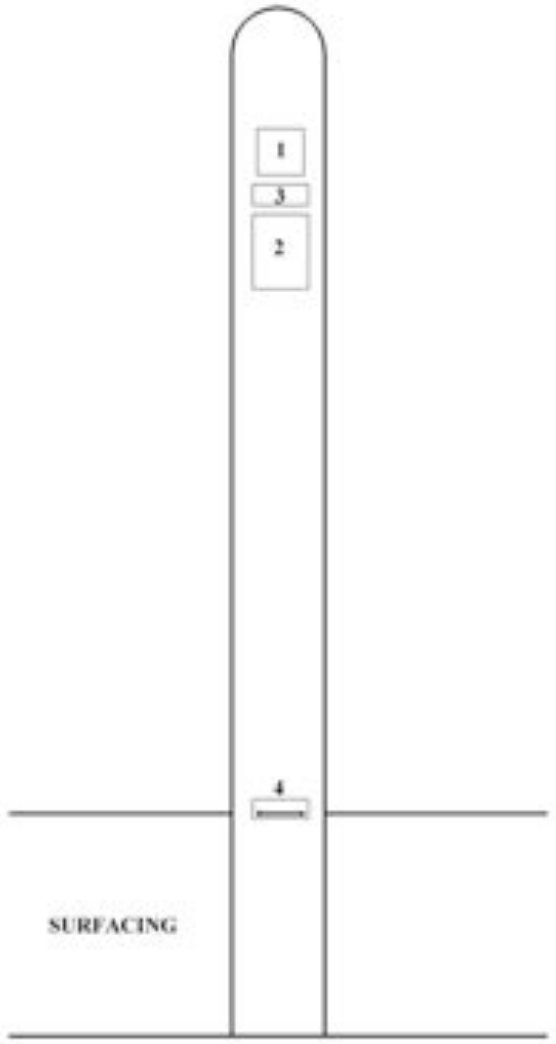

FINAL

- Completely clean area.
- Remove all debris paying special attention to sharp pieces, concrete and rocks
- Install surfacing per surfacing manufacturers instructions
- Check all components for sharp edges or damage
- If damage occurs, contact distributor for replacement parts
- Keep the area secure until all steps a complete and surfacing has been installed

MAINTENANCE

- Inspect area daily when in use for foreign objects that could cause injury or create a trip hazard
- Inspect all components for damage and contact you distributor if replacement parts are needed
- Scratches to metal or plastic can be sanded down and you can order touch up paint for the metal if required
- Inspect hardware monthly. Tighten any that are loose and replace any that are missing by contacting your distributor.
- Close and secure the equipment if a component has broken until you get replacement parts.
- If at anytime you think the equipment may be unsafe, close it and call the manufacturer to discuss the problem

This page was intentionally left blank